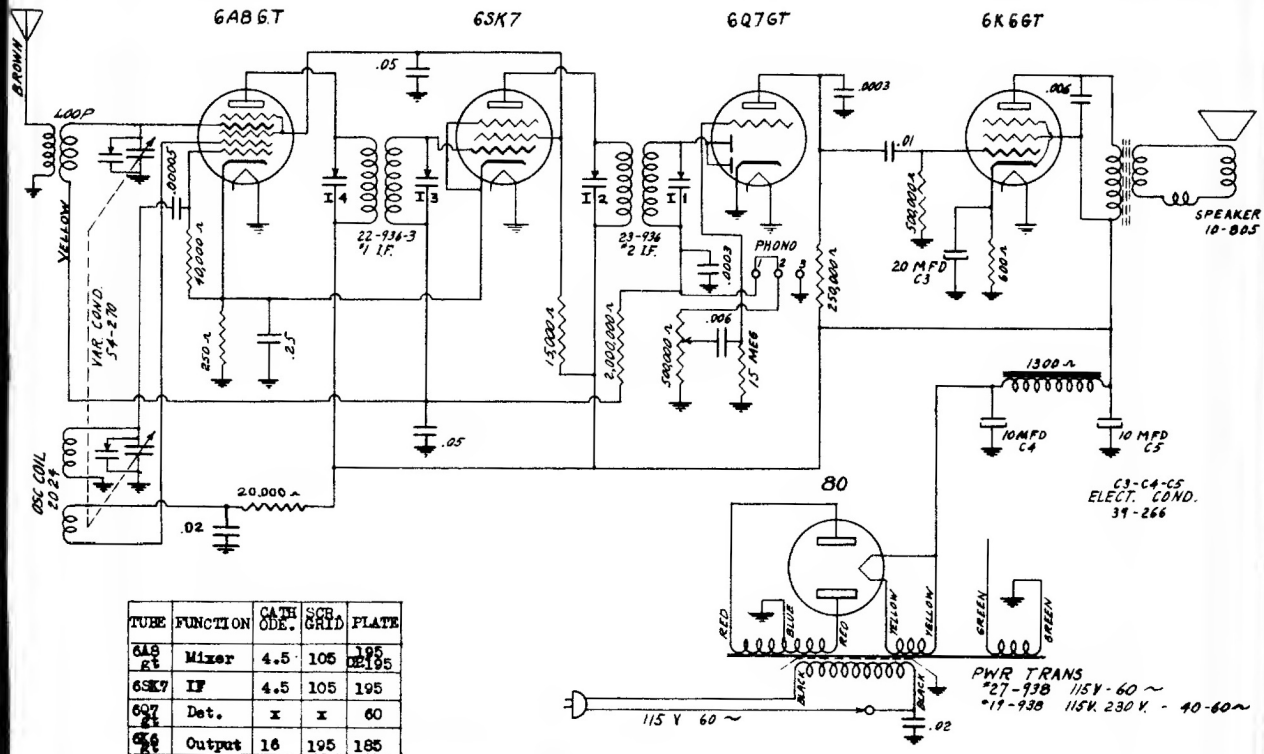

TUBE	FUNCTION	CATHODE.	SCR. GRID	PLATE
6A8 gt	Mixer	4.5	105	195 DC 195
6SK7	IF	4.5	105	195
6Q7 gt	Det.	x	x	60
6K6 gt	Output	16	195	185

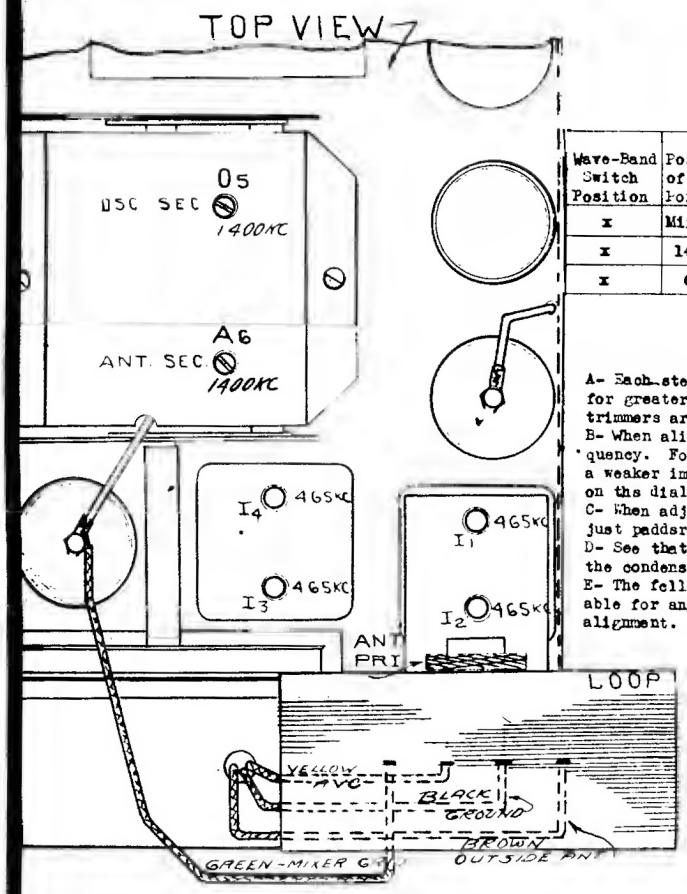

Howard Radio
Model 300

ALIGNMENT PROCEDURE

Wave-Band Switch Position	Position of Dial Pointer	Generator Frequency	Generator Connection	See Note	Trimmers Adjusted (In order shown)	Trimmer Function
x	Min. Cap.	465 KC	6A8 Grid	A,E	I_1 I_2 I_3 I_4	IF
x	1400 KC	1400 KC	Brown lead	D	O_5 A_6	Osc. & Ant.
x	600 KC	600 KC	Brown lead		OUT PLATE	OSC. SECTION

A- Each step of the alignment should be repeated in the original order for greater accuracy. Keep output from Signal Generator low. The I.F. trimmers are reached through the two holes on the top of each I.F. can.

B- When aligning the short wave bands, do not adjust to the IMAGE frequency. For example, if the adjustment is correctly made at 21 MC, then a weaker image will be heard at 21,000 KC less 930 KC, or about 20,070 KC on the dial.

C- When adjusting this pad, move the tuning hand back and forth and adjust padder until the peak of greatest intensity is obtained.

D- See that the tuning hand is set exactly on the last line above 540 when the condenser is at maximum capacity.

E- The following dummy antenna circuit is recommended, since it is adaptable for any frequency range. The grid cap should remain in place during alignment.

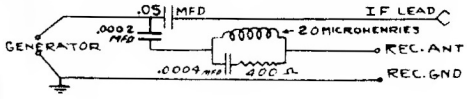

SOCKET VOLTAGE READINGS

Voltage taken from ground with line voltage at - 117 AC.
High voltage reading off rectifier = 275 V.
Drop across speaker field = 75 V.
Voltage taken with 1,000 Ohm per volt meter -