Howard Radio Company, 1731 Belmont Avenue, Chicago, Illinois

Models: 225, S-225, 250, S-250, 260, S-260, 275, 275-C, 280.

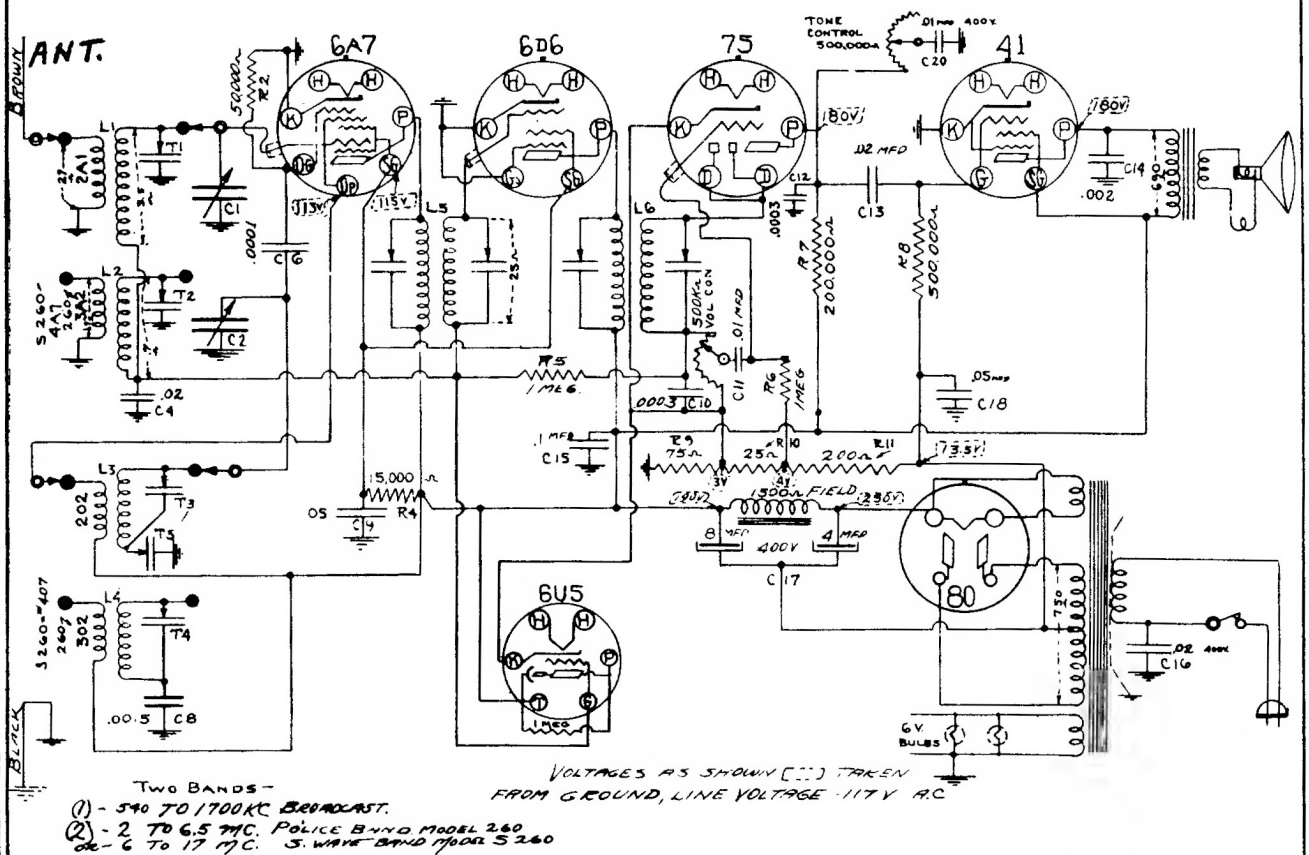

The models 225 and 250 are electrically the same chassis; the only difference being the cabinets in which they are mounted. These models have two band circuits covering the Broadcast Band 550 to 1700 KC and the so-called Police Band from 2 to 6.5 megacycles, having separate Antenna and Oscillator coils for each band.

The models S225 and S250 cover the Broadcast Band 550 to 1700 KC and the short wave band 5.5 to 18 MC.

The models 260 and S260 have the same circuit or the 225, S225 respectively with the addition of the tuning eye tube to indicate resonance.

The models 275, 275C and 280 are the same electrically, covering 3 bands, 550 to 1700 KC, 1.7 to 5.5 MC, and 5.5 to 18 MC.

The I. F.'s are aligned by the usual system of feeding the intermediate frequency of 465 KC into the grid of the 6A7 tube.

The two trimmers in each of the I. F. cans should be very carefully peaked to resonance as they are very critical and will greatly affect the performance of the set. These are trimmers number T8, T9, T10, T11.

The Sensitivity of the I. F. stages will be 25 to 50 microvolts or better for a 50 milliwatt output.

Always use as low an output as possible from the test oscillator in making the various adjustments.