KENWOOD

HI/FI STEREO COMPONENTS

SERVICE MANUAL

MODEL-700C

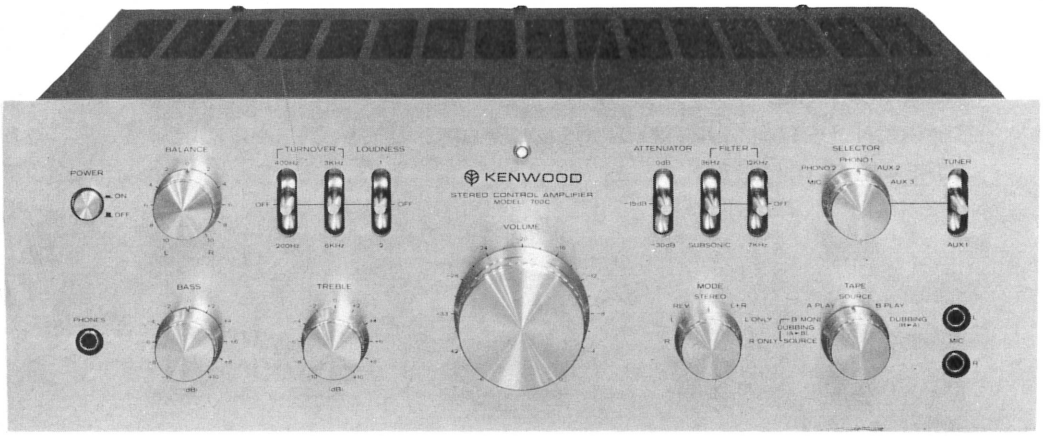

STEREO CONTROL AMPLIFIER

CONTENTS

Note:
The products are subject to modification in components and circuits in different countries and regions. This is because each product must be used under the best condition. This manual provides information of modification based on the standard in the U.S., for the convenience of ordering associated components and parts.
We employ the following abbreviations of respective countries:

U.S.A.	K	England	T
Canada	P	Scandinavia	L
PX	U	South Africa	S
Australia	X	Other areas	M
Europe	W		

EXTERNAL VIEW

The Model 700C is a stereo control amplifier used with the Series 700 Audio Component featuring the ultimate in quality. Its design and performance perfectly matches that of Model 700M (power amplifier) and Model 700T (tuner).

1. The use of dual power supply permits the input and output level of each block to keep at "OV", and unpleasant shock noise is completely eliminated, when the selector switch is turned.
2. Shock noise which occurs when the power switch is turned ON or OFF is also eliminated by virture of the reed relay having proper time constant. This assures stable operation even when 700C is connected to other unit.
3. Equalizer circuit for RIAA only is employed for further improvement of performance.
4. Adoption of volume control featuring 2dB step attenuation system.
5. Adoption of stabilized power supply.
6. The relay in parallel with the power switch assures complete safety operation, when connecting the high power amplifier.

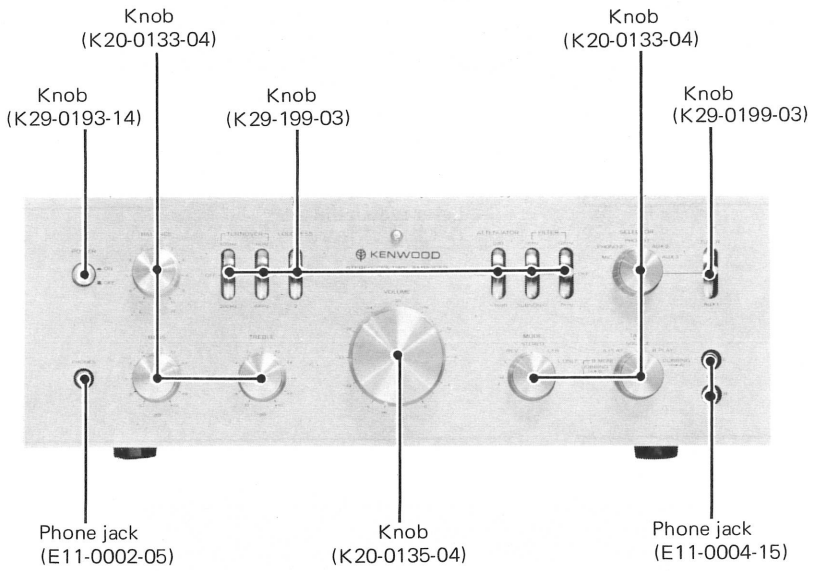

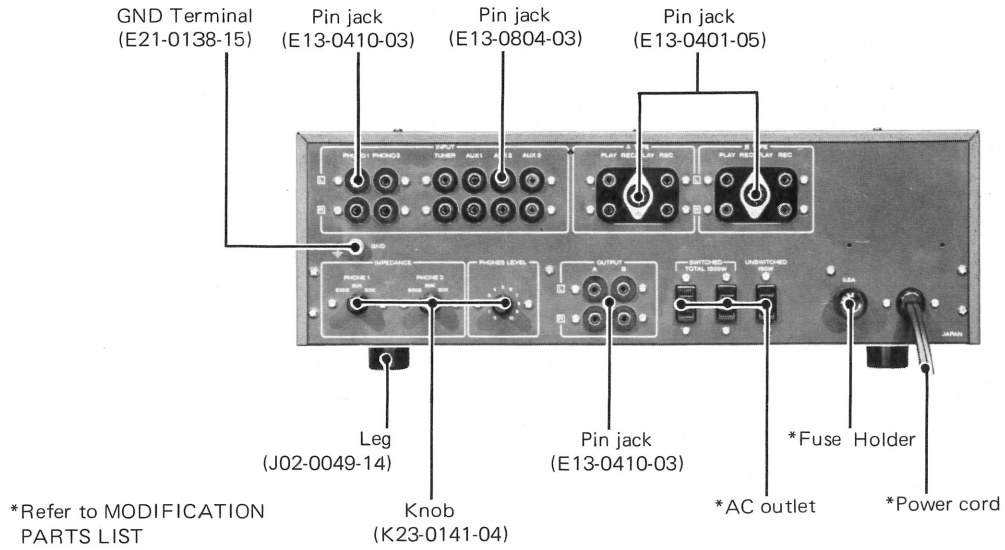

TOP & BOTTOM VIEW

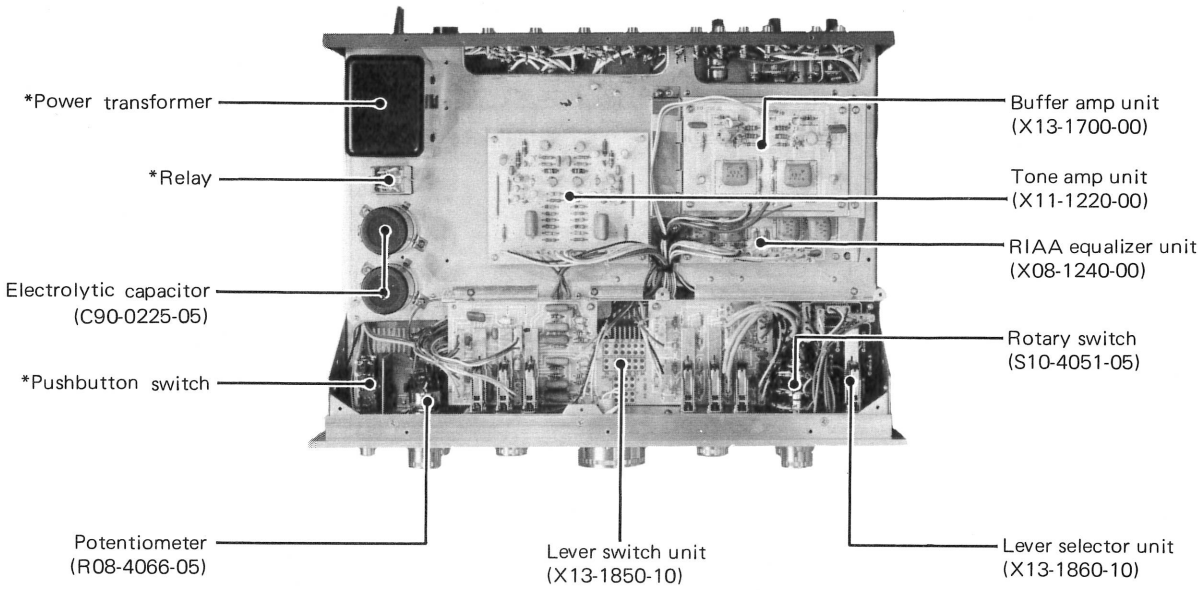

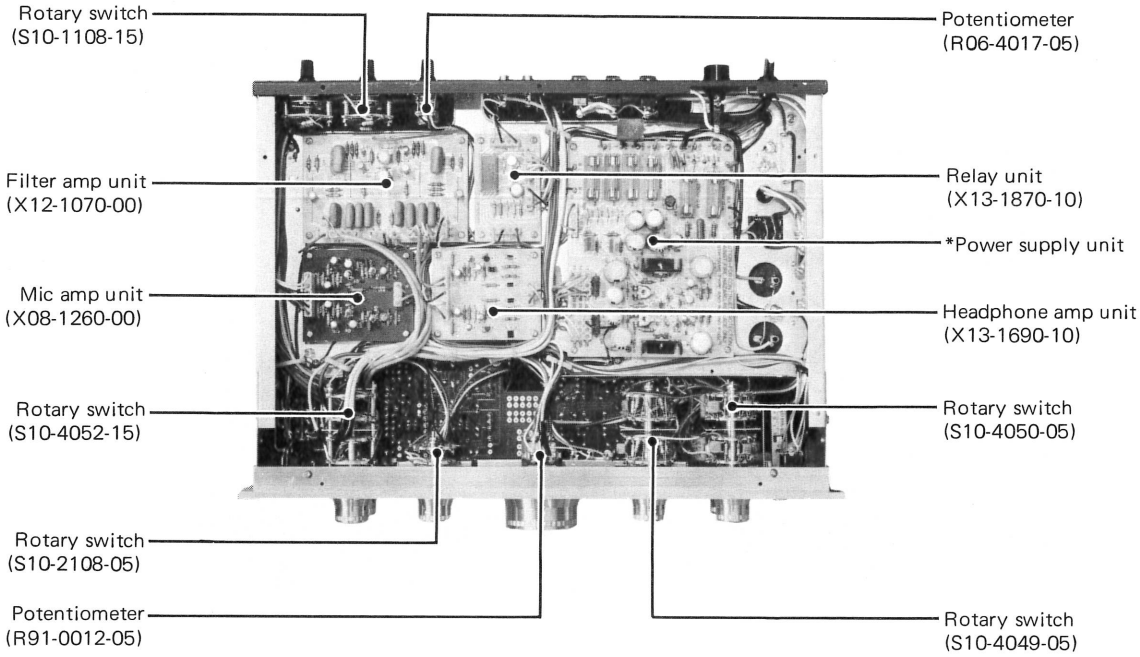

*Refer to MODIFICATION PARTS LIST

DISASSEMBLY/PACKING

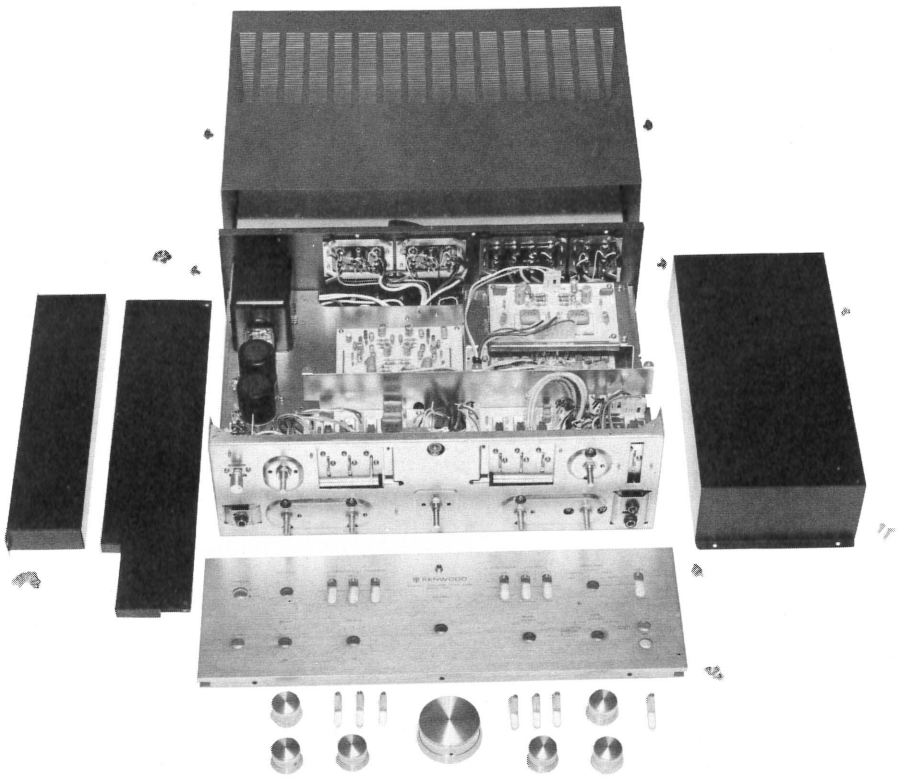

▼ PACKING

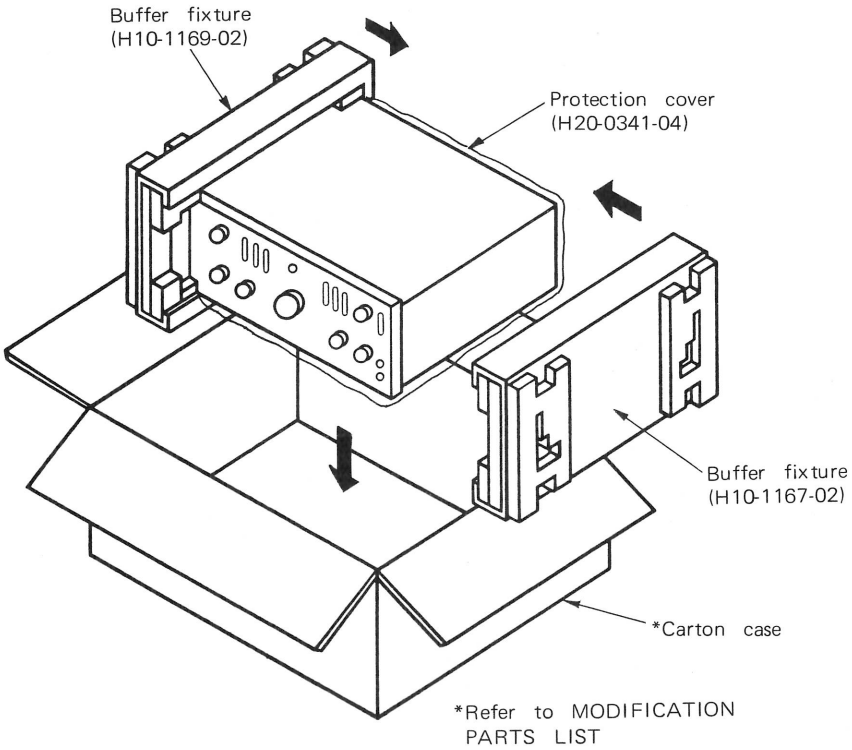

BLOCK & LEVEL DIAGRAM

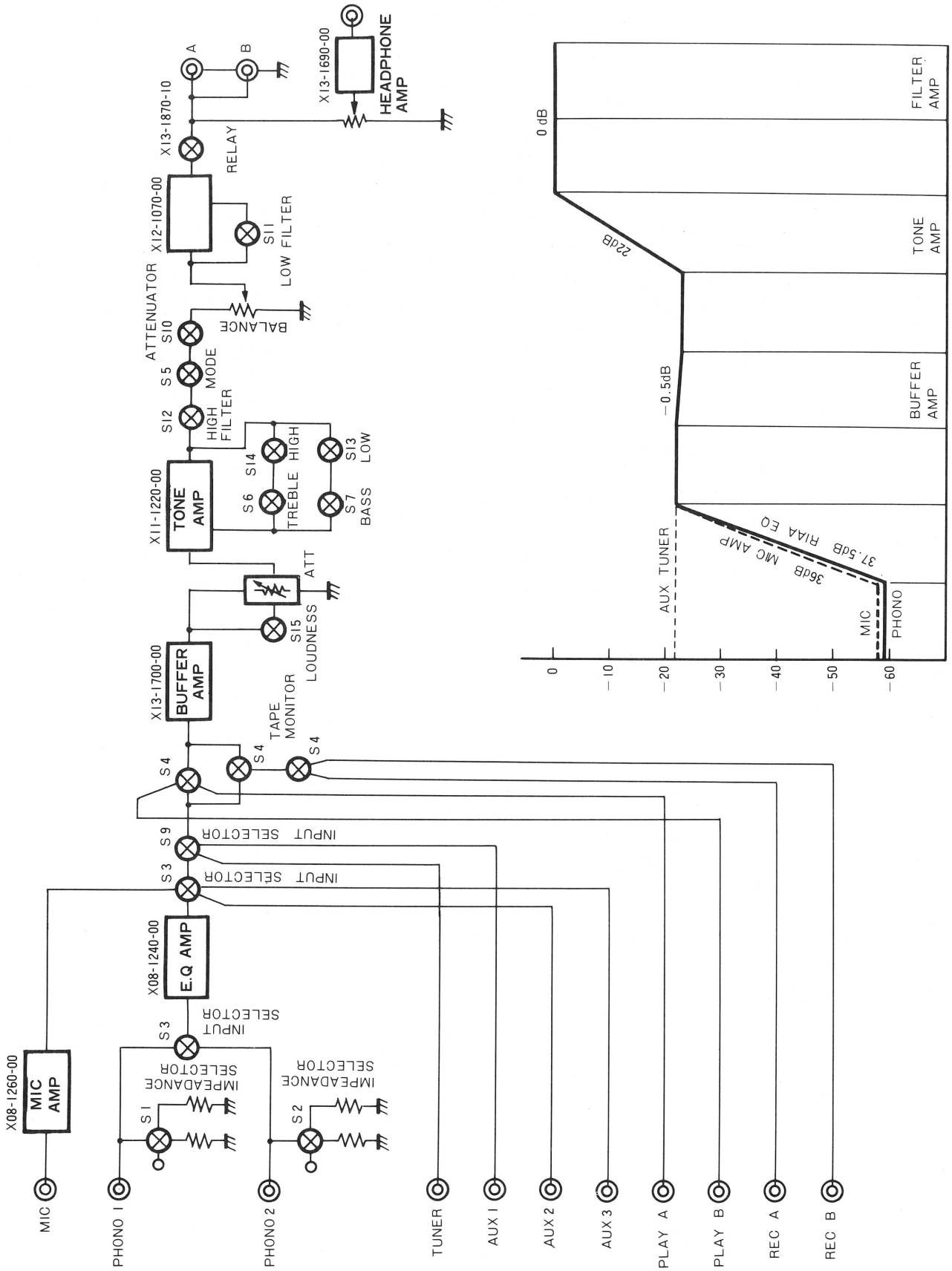

CIRCUIT DESCRIPTION

RIAA EQUALIZER AMP (X08-1240-00)

1. PNP transistor differential amplifier is employed in the first stage for excellent temperature characteristic and stable operation even at extremely small current.
2. Qd7 (Qd8) is an emitter follower providing high input impedance and low output impedance to ensure sufficient circuit gain.
3. Perfect RIAA curve characteristic is guaranteed because of more-than-enough bare-gain (gain without NF).
4. The final stage is supplied with high voltage of ±50V for wide dynamic range.

Rating:

Input impedance	43 kΩ
Output impedance	670 Ω
Voltage gain	37.5dB
Maximum input voltage	230mV or more
S/N ratio	More than 60dB (input: 2mV)

TONE AMP (X11-1220-00)

1. The first stage forms a PNP transistor differential amplifier while the transistor is used as a load, so that sufficient gain can be obtained.
2. The second stage is an emitter follower circuit to keep the total gain.
3. Adoption of rotary switch type NF tone control using selected C/R elements that exactly match individual characteristics.

HEADPHONE AMP (X13-1690-00)

1. Employment of direct-coupled OCL amplifiers throughout the entire stage.
2. The Darlington circuit composed of Qw7 (Qw8) and Qw9 (Qw10) assures sufficient current amplification.
3. Qw5 (Qw6) is used as a constant current load to obtain ample bare-gain, while the negative feedback improves the distortion factor.

BUFFER AMP (X13-1700-00)

This circuit is designed to pick up various types of inputs such as equalizer output signal, tuner signal, AUX signal, etc. for impedance-matching with the attenuator in the next stage.
The circuit is of 100% negative feedback type; therefore, it provides 0dB of voltage gain, and is outstandingly excellent in distortion and temperature characteristics.

RELAY CIRCUIT

A resistor (4Ω, 10W) is provided in the primary circuit of the transformer to prevent the flow of large rush current which is produced when the power switch is turned ON; the relay is energized a few seconds later.
The reed relay in the circuit permits the output to be grounded for a few seconds after the power switch is set to ON, thus eliminating the possibility of shock noise.

MODIFICATION PARTS LIST

Ref. No.	U.S.A. (K)	Canada (P)	PX (U)	Europe (W)	Scandinavia (L)	England (T)	Other area (M)	Description
C309, 310	–	–	–	CK45E3D103-P-MU	CK45E3D103-P-MU	CK45E3D103-P-MU(C309)	–	Ceramic capacitor 0.01μF +100%, –0%
R302	–	–	–	R92-0134-05	R92-0134-05	–	–	Wire wound resistor 4Ω ±10% 10W
S8	S59-2027-05	S59-2027-05	S59-2029-05	S59-2030-05	S59-2030-05	S59-2029-05	S59-2029-05	Pushbutton switch (POWER)
–	–	–	S31-2001-05	S31-2001-05	–	S31-2001-05	S31-2001-05	Slide switch
–	S51-2019-05	S51-2019-05	S51-2019-05	S51-2019-05	–	S51-2019-05	S51-2019-05	Relay
–	A20-0803-02	A20-0803-02	A20-0803-02	A20-0803-02	E20-0803-02	A20-0915-02	A20-0803-02	Panel assembly
–	A20-0805-02	A20-0805-02	A20-0805-02	A20-0805-02	E20-0805-02	A20-0914-02	A20-0805-02	Panel
–	A23-0495-22	A23-0495-22	A23-0497-22	A23-0496-22	A23-0498-22	A23-0496-22	A23-0497-22	Rear panel
–	B40-1157-04	B40-1007-04	B40-1008-04	B40-1010-04	B40-1012-04	B40-1163-04	B40-1009-04	Model name plate
–	–	–	–	B42-0024-04	–	–	–	SEV sticker
–	B42-0359-04 x 2	B42-0359-04	–	–	–	–	–	Caution sticker (brown)
–	–	B42-0532-04	–	–	–	–	–	Caution sticker
–	B46-0002-00	B46-0021-00	B46-0022-00	–	–	–	–	Warranty card
–	–	–	B46-0023-00	–	–	–	–	Warranty card
–	B50-1196-00	B50-1196-00	B50-1196-00	B50-1196-00	B50-1196-00	B50-1319-00	B50-1196-00	Instruction manual
–	B58-0043-00	B58-0043-00	–	–	–	–	–	Carton case caution card
–	–	–	B58-0139-00	B58-0003-00	–	B58-0003-00	B58-0003-00	Power supply caution card
–	–	–	B58-0144-00	B58-0101-00	–	B59-0101-00	B58-0101-00	Power voltage selector caution card
–	–	–	B59-0018-00	–	–	–	–	KENWOOD service station's list
–	–	–	D32-0021-04	D32-0021-04	–	D32-0021-04	D32-0021-04	Switch stopper
–	–	–	–	E05-0203-05	–	–	–	Plug for power cord
–	E08-0221-05	E08-0221-05	E08-0221-05	E08-0221-05	–	E08-0221-05	E08-0221-05	AC outlet x 3
–	E18-0802-05	E18-0802-05	E18-0802-05	E18-0802-05	–	E18-0802-05	E18-0802-05	Relay socket
–	E30-0290-05	E30-0290-05	E30-0291-05	–	E30-0292-05	–	E30-0291-05	Power cord
–	F05-1021-05	F05-1023-05	F05-1023-05	F06-1021-05	F06-1021-05	F05-1023-05	F05-1023-05	Fuse
–	–	F06-1023-05	–	–	–	–	–	Fuse
–	–	F09-0033-05	F09-0033-05	F09-0033-05	F09-0033-05	F09-0033-05	–	Capacitor cover
–	H01-1184-04	H01-1183-04	H01-1183-04	H01-1183-04	H01-1183-04	H01-1297-04	H01-1183-04	Carton case
–	–	H03-0344-04	–	H03-0344-04	H03-0344-04	H03-0402-04	H03-0344-04	Carton case
–	J13-0033-05	J13-0033-05	J13-0033-05	J13-0031-05	J13-0031-05	J13-0033-05	J13-0033-05	Fuse holder
–	J21-1243-14	J21-1243-14	J21-1243-14	–	–	–	J21-1243-14	Power cord bushing mounting hardware
–	J30-0112-04	–	–	–	–	–	–	AC outlet spacer x 3
–	J41-0032-05	J41-0032-05	J41-0032-05	J41-0017-05	J41-0017-05	J41-0024-15	J41-0032-05	Power cord bushing
–	–	–	J61-0038-05	J61-0038-05	J61-0038-05	J61-0038-05	J61-0038-05	Cord band
–	L03-0100-05	L03-0100-05	L03-0100-05	L03-0100-05	L09-0127-05	L03-0100-05	L03-0100-05	Power transformer
–	R90-0097-05	R90-0097-05	R90-0097-05	–	–	–	R90-0097-05	Spark killer
–	X00-1470-10	X00-1470-10	X00-1470-10	X00-1470-11	X00-1470-11	X00-1470-10	X00-1470-10	Power supply unit

PARTS LIST

■ TOTAL

Ref. No.	Parts No.	Description				Re-marks
		CAPACITOR				
C101	CQ93M1H103K	Mylar	0.01μF	±10%		
C102	CQ08S1H391J	Polystyrene	390pF	±5%		
C103	CQ08S1H331J	Polystyrene	330pF	±5%		
C104	CQ08S1H391J	Polystyrene	390pF	±5%		
C105	CQ93M1H472K	Mylar	0.0047μF	±10%		
C106	CQ93M1H223K	Mylar	0.022μF	±10%		
C107	CQ93M1H822K	Mylar	0.0082μF	±10%		
C108	CQ93M1H392K	Mylar	0.0039μF	±10%		
C109	CQ93M1H182K	Mylar	0.0018μF	±10%		
C110	CQ93M1H392K	Mylar	0.0039μF	±10%		
C111	CQ93M1H683K	Mylar	0.068μF	±10%		
C112	CQ93M1H223K	Mylar	0.022μF	±10%		
C113	CQ93M1H683K	Mylar	0.068μF	±10%		
C114	CQ93M1H154K	Mylar	0.15μF	±10%		
C115	CQ93M1H334K	Mylar	0.33μF	±10%		
C201	CQ93M1H103K	Mylar	0.01μF	±10%		
C202	CQ08S1H391J	Polystyrene	390pF	±5%		
C203	CQ08S1H331J	Polystyrene	330pF	±5%		
C204	CQ08S1H391J	Polystyrene	390pF	±5%		
C205	CQ93M1H472K	Mylar	0.0047μF	±10%		
C206	CQ93M1H223K	Mylar	0.022μF	±10%		
C207	CQ93M1H822K	Mylar	0.0082μF	±10%		
C208	CQ93M1H392K	Mylar	0.0039μF	±10%		
C209	CQ93M1H182K	Mylar	0.0018μF	±10%		
C210	CQ93M1H392K	Mylar	0.0039μF	±10%		
C211	CQ93M1H683K	Mylar	0.068μF	±10%		
C212	CQ93M1H223K	Mylar	0.022μF	±10%		
C213	CQ93M1H683K	Mylar	0.068μF	±10%		
C214	CQ93M1H154K	Mylar	0.15μF	±10%		
C215	CQ93M1H334K	Mylar	0.33μF	±10%		
C301	C90-0145-05	Polyester	0.01μF	±20%		
C302, 303	C90-0225-05	Electrolytic	2200μF	80WV		
C304~308	CK45D1H561M	Ceramic	560pF	±20%		
		RESISTOR				
R101~103	RC05GF2H225K	Carbon	2.2MΩ	±10%	1/2W	
R104	PD14BY2E242J	Carbon	2.4KΩ	±5%	1/4W	
R105	PD14BY2E112J	Carbon	1.1KΩ	±5%	1/4W	
R106	PD14BY2E911J	Carbon	910Ω	±5%	1/4W	
R107	PD14BY2E751J	Carbon	750Ω	±5%	1/4W	
R108	PD14BY2E681J	Carbon	680Ω	±5%	1/4W	
R109	RC05GF2H225K	Carbon	2.2MΩ	±10%	1/2W	
R110	PD14BY2E103J	Carbon	10KΩ	±5%	1/4W	
R111	PD14BY2E113J	Carbon	11KΩ	±5%	1/4W	
R112	PD14BY2E133J	Carbon	13KΩ	±5%	1/4W	
R113	PD14BY2E153J	Carbon	15KΩ	±5%	1/4W	
R114	PD14BY2E333J	Carbon	33KΩ	±5%	1/4W	
R115	PD14BY2E684J	Carbon	680KΩ	±5%	1/4W	
R116	PD14BY2E393J	Carbon	39KΩ	±5%	1/4W	
R117	PD14BY2E104J	Carbon	100KΩ	±5%	1/4W	
R118	PD14BY2E244J	Carbon	240KΩ	±5%	1/4W	
R119	PD14BY2E564J	Carbon	560KΩ	±5%	1/4W	
R120	PD14BY2E683J	Carbon	68KΩ	±5%	1/4W	
R121	PD14BY2E563J	Carbon	56KΩ	±5%	1/4W	
R122	PD14BY2E223J	Carbon	22KΩ	±5%	1/4W	
R123	PD14BY2E912J	Carbon	9.1KΩ	±5%	1/4W	
R124	PD14BY2E302J	Carbon	3KΩ	±5%	1/4W	
R125	PD14BY2E621J	Carbon	620Ω	±5%	1/4W	
R126	PD14BY2E753J	Carbon	75KΩ	±5%	1/4W	
R127	PD14BY2E621J	Carbon	620Ω	±5%	1/4W	
R128	PD14BY2E753J	Carbon	75KΩ	±5%	1/4W	
R129	PD14BY2E394J	Carbon	390KΩ	±5%	1/4W	
R130	PD14BY2E104J	Carbon	100KΩ	±5%	1/4W	
R131	PD14BY2E394J	Carbon	390KΩ	±5%	1/4W	
R132	PD14BY2E104J	Carbon	100KΩ	±5%	1/4W	
R133~136	PD14BY2E472J	Carbon	4.7KΩ	±5%	1/4W	
R137, 138	PD14BY2E684J	Carbon	680KΩ	±5%	1/4W	
R139	PD14BY2E333J	Carbon	33KΩ	±5%	1/4W	
R140, 141	PD14BY2E561J	Carbon	560Ω	±5%	1/4W	
R201~203	RC05GF2H225K	Carbon	2.2MΩ	±10%	1/2W	
R204	PD14BY2E242J	Carbon	2.4KΩ	±5%	1/4W	
R205	PD14BY2E112J	Carbon	1.1KΩ	±5%	1/4W	
R206	PD14BY2E911J	Carbon	910Ω	±5%	1/4W	
R207	PD14BY2E751J	Carbon	750Ω	±5%	1/4W	
R208	PD14BY2E681J	Carbon	680Ω	±5%	1/4W	
R209	RC05GF2H225K	Carbon	2.2MΩ	±10%	1/2W	
R210	PD14BY2E103J	Carbon	10KΩ	±5%	1/4W	
R211	PD14BY2E113J	Carbon	11KΩ	±5%	1/4W	
R212	PD14BY2E133J	Carbon	13KΩ	±5%	1/4W	
R213	PD14BY2E153J	Carbon	15KΩ	±5%	1/4W	
R214	PD14BY2E333J	Carbon	33KΩ	±5%	1/4W	
R215	PD14BY2E684J	Carbon	680KΩ	±5%	1/4W	
R216	PD14BY2E393J	Carbon	39KΩ	±5%	1/4W	
R217	PD14BY2E104J	Carbon	100KΩ	±5%	1/4W	
R218	PD14BY2E244J	Carbon	240KΩ	±5%	1/4W	
R219	PD14BY2E564J	Carbon	560KΩ	±5%	1/4W	
R220	PD14BY2E683J	Carbon	68KΩ	±5%	1/4W	
R221	PD14BY2E563J	Carbon	56KΩ	±5%	1/4W	
R222	PD14BY2E223J	Carbon	22KΩ	±5%	1/4W	
R223	PD14BY2E912J	Carbon	9.1KΩ	±5%	1/4W	
R224	PD14BY2E302J	Carbon	3KΩ	±5%	1/4W	
R225	PD14BY2E621J	Carbon	620Ω	±5%	1/4W	
R226	PD14BY2E753J	Carbon	75KΩ	±5%	1/4W	
R227	PD14BY2E621J	Carbon	620Ω	±5%	1/4W	
R228	PD14BY2E753J	Carbon	75KΩ	±5%	1/4W	
R229	PD14BY2E394J	Carbon	390KΩ	±5%	1/4W	
R230	PD14BY2E104J	Carbon	100KΩ	±5%	1/4W	
R231	PD14BY2E394J	Carbon	390KΩ	±5%	1/4W	
R232	PD14BY2E104J	Carbon	100KΩ	±5%	1/4W	
R233~236	PD14BY2E472J	Carbon	4.7KΩ	±5%	1/4W	
R237, 238	PD14BY2E684J	Carbon	680KΩ	±5%	1/4W	
R239	PD14BY2E333J	Carbon	33KΩ	±5%	1/4W	
R240, 241	PD14BY2E561J	Carbon	560Ω	±5%	1/4W	
R301	R92-0134-05	Wire wound	4Ω	±10%	10W	
		POTENTIOMETER				
–	R06-4017-05	PHONES LEVEL 50kΩ (B)				
–	R08-4066-05	BALANCE 50KΩ (M+N)				
–	R91-0012-05	MAIN VOLUME				
		SWITCH				
S1,2	S10-1108-15	Rotary (IMPEDANCE SELECTOR)				
S3	S10-4051-05	Rotary (INPUT SELECTOR)				
S4	S10-4052-15	Rotary (TAPE MONITOR)				
S5	S10-2108-05	Rotary (MODE)				
S6	S10-4049-05	Rotary (TREBLE)				
S7	S10-4050-05	Rotary (BASS)				

PARTS LIST

Ref. No.	Parts No.	Description	Re-marks
		MISCELLANEOUS	
–	A01-0248-02	Case	
–	A10-0399-11	Chassis	
–	A22-0159-12	Sub panel	
–	A40-0132-03	Bottom plate	
–	B07-0124-14	Pushbutton switch ring	
–	B07-0131-04	Indicator ring	
–	B08-9009-04	Indicator	
–	B30-0091-05	Pilot lamp (8V, 150mA)	
–	B42-0009-04	Passed sticker	
–	B52-0167-00	Schematic diagram	
–	B59-0052-00	Factory tested data	
–	E11-0002-05	Phone jack (PHONES)	
–	E11-0004-15	Phone jack (MIC) x 2	
–	E13-0401-05	Pin jack (with DIN) x 2	
–	E13-0410-03	Pin jack (4P) x 2	
–	E13-0804-03	Pin jack (8P)	
–	E21-0138-15	Terminal (GND)	
–	E30-0416-05	Audio cable	
–	F07-0342-02	Shield cover A	
–	F07-0343-02	Shield cover B	
–	F07-0344-03	Shield cover C	
–	F14-0080-04	Shading ring A	
–	F14-0081-04	Shading ring B	
–	H10-1167-02	Buffer fixture	
–	H10-1169-02	Buffer fixture	
–	H20-0341-04	Protection cover	
–	H25-0048-03	Instruction bag	
–	J02-0049-14	Leg x 4	
–	J21-1032-04	Pin jack mounting hardware (4P)	
–	J21-1039-04	Pin jack mounting hardware (with DIN) x 2	
–	J21-1283-04	Pin jack mounting hardware (8P)	
–	J21-1265-04	PC board mounting hardware A	
–	J21-1266-04	PC board mounting hardware B	
–	J21-1267-03	PC board mounting hardware C	
–	J21-1268-03	PC board mounting hardware D	
–	J21-1269-04	Rotary switch mounting hardware x 2	
–	J21-1285-04	PHONES LEVEL volume mounting hardware	
–	J30-0114-04	SPACER (for MAIN VOLUME)	
–	K20-0133-04	Knob x 6	
–	K20-0135-04	Knob (MAIN VOLUME)	
–	K23-0141-04	Knob x 3	
–	K29-0193-14	Knob (POWER)	
–	K29-0199-03	Knob x 7	
–	X08-1240-00	RIAA equalizer amp unit	
–	X08-1260-00	Mic amp unit	
–	X11-1220-00	Tone amp unit	
–	X12-1070-00	Filter amp unit	
–	X13-1690-00	Headphone amp unit	
–	X13-1700-00	Buffer amp unit	
–	X13-1850-10	Lever switch unit	
–	X13-1860-10	Lever selector unit	
–	X13-1870-10	Relay unit	

■ POWER SUPPLY (X00-1470-10, 11)

Ref. No.	Parts No.	Description	Re-marks
		CAPACITOR	
Ck1,2	CK45E2H103P	Ceramic 0.01μF 100%, –0%	
Ck3,4	CE04W2A470	Electrolytic 47μF 100WV	
Ck5,6	CK45D1H561M	Ceramic 560pF ±20%	
Ck7	CE04W1E100	Electrolytic 10μF 25WV	
Ck8,9	CS151E1VR47M	Tantalum 0.47μF 35WV	
Ck11,12	CE04W1J221	Electrolytic 220μF 63WV	
Ck13,14	CE04W1E221	Electrolytic 220μF 25WV	
Ck15~18	CE04W1C471	Electrolytic 470μF 16WV	
Ck19	CE04W1V101	Electrolytic 100μF 35WV	
		RESISTOR	
Rk1,2	RC05GF2H4R7K	Carbon 4.7Ω ±10% 1/2W	
Rk3,4	PD14BY2E561J	Carbon 560Ω ±5% 1/4W	
Rk5,6	PD14BY2E153J	Carbon 15KΩ ±5% 1/4W	
Rk7	PD14BY2E363J	Carbon 36KΩ ±5% 1/4W	
Rk8	PD14BY2E513J	Carbon 51KΩ ±5% 1/4W	
Rk9	PD14BY2E562J	Carbon 5.6KΩ ±5% 1/4W	
Rk10	PD14BY2E153J	Carbon 15KΩ ±5% 1/4W	
Rk11	PD14BY2E163J	Carbon 16KΩ ±5% 1/4W	
Rk13,14	RN14AB3D821K-B	Metal film 820Ω ±10% 2W	
RK15,16	PD14BY2E331J	Carbon 330Ω ±5% 1/4W	
Rk17,18	PD14BY2E561J	Carbon 560Ω ±5% 1/4W	
Rk19	RN14AB3D102K-B	Metal film 1KΩ ±10% 2W	
		SEMICONDUCTOR	
Qk1		2SC1419 (B), (C)	
Qk2		2SA755 (B), (C)	
Qk3		2SC1419 (B), (C)	
Qk4		2SA755 (B), (C)	
Qk5		2SC1416A (GR)	
Qk6		2SA620 WL (4)	
Qk7		2SC1416A (GR)	
Qk8		2SA620WL (4)	
Qk9		2SC1416A (GR)	
Qk10		2SA620WL (4)	
Dk1~4		V03C	
Dk5		YZ-140	
Dk6		W04M	
Dk7,8		CZ-245	
Dk9~12		V06B	
		POTENTIOMETER	
VRk1,2	R12-2016-05	PC trimmer 5KΩ (B)	
		MISCELLANEOUS	
–	E19-0302-05	Mini-connector (3P) x 4	
–	E19-0401-05	Mini-connector (4P) x 4	
–	F01-0188-04	Heat sink	
Fk1,2	F05-1012-05	Fuse (0.1A)	–10
Fk1,2	F05-1013-05	Fuse (0.1A)	–11
Fk3,4	F05-5013-05	Fuse (0.5A)	–10
Fk3,4	F05-5015-05	Fuse (0.5A)	–11
Fk5	F05-1012-05	Fuse (0.1A)	–10
Fk5	F05-1013-05	Fuse (0.1A)	–11
Fk6	F05-5013-05	Fuse (0.5A)	–10
Fk6	F05-5015-05	Fuse (0.5A)	–11
–	J13-0032-05	Fuse holder x 6	–11
–	J13-0034-05	Fuse holder x 6	–10

PARTS LIST

■ RIAA EQUALIZER AMP (X08-1240-00)

Ref. No.	Parts No.	Description	Re-marks
		CAPACITOR	
Cd1,2	C90-0167-05	Polypropylene 2.2μF ±20%	
Cd5,6	CC45SL1H470K	Ceramic 47pF ±10%	
Cd7,8	CE04W1C470	Electrolytic 47μF 16WV	
Cd9~14	CQ93M1H152J	Mylar 0.0015μF ±5%	
Cd15,16	CQ93M1H182J	Mylar 0.0018μF ±5%	
Cd17,18	CC45SL1H100K	Ceramic 10pF ±10%	
Cd19,20	CE04W0J101	Electrolytic 100μF 6.3WV	
Cd21,22	CQ93M1H474M	Mylar 0.47μF ±20%	
Cd23,24	CE04W1H330	Electrolytic 33μF 50WV	
Cd25,26	CQ93M1H103M	Mylar 0.01μF ±20%	
Cd27,28	CE04W1C470	Electrolytic 47μF 16WV	
		RESISTOR	
Rd1,2	PD14BY2E102J	Carbon 1KΩ ±5% 1/4W	
Rd3,4	PD14BY2E683J	Carbon 68KΩ ±5% 1/4W	
Rd5,6	PD14BY2E184J	Carbon 180KΩ ±5% 1/4W	
Rd7,8	PD14BY2E683J	Carbon 68KΩ ±5% 1/4W	
Rd9,10	PD14BY2E334J	Carbon 330KΩ ±5% 1/4W	
Rd11,12	PD14BY2E434J	Carbon 430KΩ ±5% 1/4W	
Rd13,14	PD14BY2E302J	Carbon 3KΩ ±5% 1/4W	
Rd15,16	PD14BY2E824G	Carbon 820KΩ ±2% 1/4W	
Rd17,18	PD14BY2E684G	Carbon 680KΩ ±2% 1/4W	
Rd19,20	PD14BY2E564G	Carbon 560KΩ ±2% 1/4W	
Rd21,22	PD14BY2E154G	Carbon 150KΩ ±2% 1/4W	
Rd23,24	PD14BY2E473J	Carbon 47KΩ ±5% 1/4W	
Rd25,26	PD14BY2E513J	Carbon 51KΩ ±5% 1/4W	
Rd27,28	PD14BY2E562J	Carbon 5.6KΩ ±5% 1/4W	
Rd29,30	PD14BY2E152J	Carbon 1.5KΩ ±5% 1/4W	
Rd31,32	PD14BY2E121J	Carbon 120Ω ±5% 1/4W	
Rd33,34	PD14BY2E471J	Carbon 470Ω ±5% 1/4W	
Rd35,36	PD14BY2H682J	Carbon 6.8KΩ ±5% 1/2W	
Rd37,38	PD14BY2E561J	Carbon 560Ω ±5% 1/4W	
Rd39,40	PD14BY2E224J	Carbon 220KΩ ±5% 1/4W	
Rd41,42	PD14BY2E183J	Carbon 18KΩ ±5% 1/4W	
Rd43,44	PD14BY2E682J	Carbon 6.8KΩ ±5% 1/4W	
		SEMICONDUCTOR	
Qd1~6		2SA620WL (5)	
Qd7,8		2SC1416 (GR), (BL)	
Qd9,10		2SC1451 (V)	
		MISCELLANEOUS	
—	E19-0302-05	Mini-connector (3P)	
—	E19-0401-05	Mini-connector (4P) x 2	

■ MIC AMP (X08-1260-00)

Ref. No.	Parts No.	Description	Re-marks
		CAPACITOR	
Cm1,2	CE04W1H010	Electrolytic 1μF 50WV	
Cm3~6	CC45SL1H470K	Ceramic 47pF ±10%	
Cm7,8	CE04W1E2R2M	Electrolytic 2.2μF 25WV	
Cm9,10	CC45SL1H271K	Ceramic 270pF ±10%	
Cm11,12	CC45SL1H470K	Ceramic 47pF ±10%	
Cm13,14	CE04W1H010	Electrolytic 1μF 50WV	
		RESISTOR	
Rm1,2	PD14BY2E621J	Carbon 620Ω ±5% 1/4W	
Rm3,4	PD14BY2E563J	Carbon 56KΩ ±5% 1/4W	
Rm5,6	PD14BY2E122J	Carbon 1.2KΩ ±5% 1/4W	
Rm7,8	PD14BY2E822J	Carbon 8.2KΩ ±5% 1/4W	
Rm9,10	PD14BY2E124J	Carbon 120KΩ ±5% 1/4W	
Rm11,12	PD14BY2E821J	Carbon 820Ω ±5% 1/4W	
Rm13,14	PD14BY2E563J	Carbon 56KΩ ±5% 1/4W	
Rm15,16	PD14BY2E822J	Carbon 8.2KΩ ±5% 1/4W	
Rm17,18	PD14BY2E560J	Carbon 56Ω ±5% 1/4W	
Rm19,20	PD14BY2E124J	Carbon 120KΩ ±5% 1/4W	
		SEMICONDUCTOR	
Qm1~4		2SA620WL (4), (5)	
Qm5,6		2SC1416A (GR), (BL)	
		MISCELLANEOUS	
—	E19-0302-05	Mini-connector (3P)	
—	E19-0602-05	Mini-connector (6P)	

■ TONE AMP (X11-1220-00)

Ref. No.	Parts No.	Description	Re-marks
		CAPACITOR	
Ci1,2	CQ93M1H474M	Mylar 0.47μF ±20%	
Ci7,8	CC45SL1H050D	Ceramic 5pF ±0.5pF	
Ci9,10	CC45SL1H150K	Ceramic 15pF ±10%	
Ci11,12	CC45SL1H100D	Ceramic 10pF ±0.5pF	
Ci13,14	CE04W1H010	Electrolytic 1μF 50WV	
Ci15,16	CQ93M1H103K	Mylar 0.01μF ±10%	
Ci17,18	CE04W0J101	Electrolytic 100μF 6.3WV	
Ci19,20	CE04W1E100(NP)	Electrolytic 10μF 25WV	
		RESISTOR	
Ri1,2	PD14BY2E222J	Carbon 2.2KΩ ±5% 1/4W	
Ri3,4	PD14BY2E364J	Carbon 360KΩ ±5% 1/4W	
Ri5,6	PD14BY2E184J	Carbon 180KΩ ±5% 1/4W	
Ri7,8	PD14BY2E104J	Carbon 100KΩ ±5% 1/4W	
Ri9,10	PD14BY2E562J	Carbon 5.6KΩ ±5% 1/4W	
Ri11,12	PD14BY2E474J	Carbon 470KΩ ±5% 1/4W	
Ri13,14	PD14BY2E303J	Carbon 30KΩ ±5% 1/4W	
Ri15,16	PD14BY2E684J	Carbon 680KΩ ±5% 1/4W	

PARTS LIST

Ref. No.	Parts No.	Description	Re-marks
Ri17,18	RC05GF2H185K	Carbon 1.8MΩ ±10% 1/2W	
Ri19,20	RC05GF2H104K	Carbon 100KΩ ±10% 1/2W	
Ri21,22	RC05GF2H562K	Carbon 5.6KΩ ±10% 1/2W	
Ri23,24	PD14BY2E122J	Carbon 1.2KΩ ±5% 1/4W	
Ri25,26	PD14BY2E151J	Carbon 150Ω ±5% 1/4W	
Ri27,28	PD14BY2E102J	Carbon 1KΩ ±5% 1/4W	
Ri29,30	PD14BY2E822J	Carbon 8.2KΩ ±5% 1/4W	
SEMICONDUCTOR			
Qi1~4		2SA620WL (5)	
Qi5,6		2SC1416(GR)	
Qi7,8		2SA620WL (5)	
Qi9,10		2SC1416 (GR)	
MISCELLANEOUS			
–	E19-0602-05	Mini-connector (6P) x 3	

Ref. No.	Parts No.	Description	Re-marks
Rw9,10	PD14BY2E563J	Carbon 56KΩ ±5% 1/4W	
Rw11~14	PD14BY2E150J-B	Carbon 15Ω ±5% 1/4W	
Rw15,16	PD14BY2E222J	Carbon 2.2KΩ ±5% 1/4W	
Rw17	PD14BY2E102J	Carbon 1kΩ ±5% 1/4W	
SEMICONDUCTOR			
Qw1~4		2SA620WL (4), (5)	
Qw5,6		2SA673A	
Qw7,8		2SC945 (R), (Q), (R)	
Qw9,10		2SC1213A	
Dw1,2		STV-3H	
MISCELLANEOUS			
–	E19-0302-05	Mini-connector (3P) x 2	
–	E19-0401-05	Mini-connector (4P)	

■ FILTER AMP (X12-1070-00)

Ref. No.	Parts No.	Description	Re-marks
CAPACITOR			
Cs1~8	CQ93M1H224J	Mylar 0.22μF ±5%	
Cs11,12	CQ93M1H474M	Mylar 0.47μF ±20%	
Cs13,14	CE04W1E3R3(NP)	Electrolytic 3.3μF 25WV	
Cs15,16	CE04W1V101	Electrolytic 100μF 35WV	
RESISTOR			
Rs1,2	PD14BY2E824J	Carbon 820KΩ ±5% 1/4W	
Rs3,4	PD14BY2E684J	Carbon 680KΩ ±5% 1/4W	
Rs5,6	PD14BY2E273J	Carbon 27KΩ ±5% 1/4W	
Rs7,8	PD14BY2E684J	Carbon 680KΩ ±5% 1/4W	
Rs9,10	PD14BY2E104J	Carbon 100KΩ ±5% 1/4W	
Rs11,12	PD14BY2E184J	Carbon 180KΩ ±5% 1/4W	
Rs13,14	PD14BY2E222J	Carbon 2.2KΩ ±5% 1/4W	
Rs15,16	PD14BY2E822J	Carbon 8.2KΩ ±5% 1/4W	
Rs17,18	PD14BY2E820J	Carbon 82Ω ±5% 1/4W	
Rs19,20	PD14BY2E562J	Carbon 5.6KΩ ±5% 1/4W	
Rs23,24	PD14BY2E184J	Carbon 180KΩ ±5% 1/4W	
SEMICONDUCTOR			
Qs1,2		2SA620WL (4), (5)	
Qs3,4		2SC1416 (GR), (BL)	
MISCELLANEOUS			
–	E19-0302-05	Mini-connector (3P) x 3	
–	E19-0401-05	Mini-connector (4P) x 3	

■ HEADPHONE AMP (X13-1690-00)

Ref. No.	Parts No.	Description	Re-marks
CAPACITOR			
Cw1,2	CE04W1H010	Electrolytic 1μF 50WV	
Cw3~6	CK45D1H561M	Ceramic 560pF ±20%	
Cw7	CE04W0J470	Electrolytic 47μF 6.3V	
RESISTOR			
Rw1,2	PD14BY2E563J	Carbon 56KΩ ±5% 1/4W	
Rw3,4	PD14BY2E562J	Carbon 5.6KΩ ±5% 1/4W	
Rw5,6	PD14BY2E512J	Carbon 5.1KΩ ±5% 1/4W	
Rw7,8	PD14BY2E332J	Carbon 3.3KΩ ±5% 1/4W	

■ BUFFER AMP (X13-1700-00)

Ref. No.	Parts No.	Description	Re-marks
CAPACITOR			
Cx1,2	CQ93M1H474M	Mylar 0.47μF ±20%	
Cx5,6	CE04W1H3R3(NP)	Electrolytic 3.3μF 50WV	
Cx9,10	CE04W1H330	Electrolytic 33μF 50WV	
RESISTOR			
Rx1,2	PD14BY2E222J	Carbon 2.2KΩ ±5% 1/4W	
Rx3,4	PD14BY2E224J	Carbon 220KΩ ±5% 1/4W	
Rx5,6	PD14BY2E184J	Carbon 180KΩ ±5% 1/4W	
Rx7,8	PD14BY2E820J	Carbon 82Ω ±5% 1/4W	
Rx9,10	RC05GF2H822J	Carbon 8.2KΩ ±5% 1/2W	
Rx11,12	RC05GF2H562J	Carbon 5.6KΩ ±5% 1/2W	
Rx13,14	PD14BY2E391J	Carbon 390Ω ±5% 1/4W	
Rx15,16	PD14BY2E224J	Carbon 220KΩ ±5% 1/4W	
SEMICONDUCTOR			
Qx1,2		2SA620WLH (4), (5)	
Qx3,4		2SC1451 (V)	
MISCELLANEOUS			
–	E19-0302-05	Mini-connector (3P) x 2	
–	E19-0401-05	Mini-connector (4P)	

■ LEVER SWITCH (X13-1850-10)

Ref. No.	Parts No.	Description	Re-marks
CAPACITOR			
Ch1,2	CQ93M1H472J	Mylar 0.0047μF ±5%	
Ch3,4	CQ93M1H683K	Mylar 0.068μF ±10%	
Ch5,6	CQ93M1H103J	Mylar 0.01μF ±5%	
Ch7,8	CQ08S1H821J	Polystyrene 820pF ±5%	
Ch9~12	CQ08S1H391J	Polystyrene 390pF ±5%	
Ch13,14	CQ93M1H224J	Mylar 0.22μF ±5%	
Ch15,16	CQ93M1H122J	Mylar 0.0012μF ±5%	
Ch17,18	CQ93M1H334K	Mylar 0.33μF ±10%	
Ch19,20	CQ93M1H224J	Mylar 0.22μF ±5%	
Ch21,22	CQ93M1H472J	Mylar 0.0047μF ±5%	
Ch23,24	CQ93M1H152J	Mylar 0.0015μF ±5%	
Ch25,26	CQ93M1H103J	Mylar 0.01μF ±5%	

PARTS LIST

Ref. No.	Parts No.	Description	Re-marks
Ch27,28	CQ93M1H102J	Mylar 0.001μF ±5%	
RESISTOR			
Rh1~4	PD14BY2E105J	Carbon 1MΩ ±5% 1/4W	
Rh5,6	PD14BY2E242G	Carbon 2.4KΩ ±2% 1/4W	
Rh7~10	PD14BY2E105J	Carbon 1MΩ ±5% 1/4W	
Rh11,12	PD14BY2E433J	Carbon 43KΩ ±5% 1/4W	
Rh13,14	PD14BY2E152J	Carbon 1.5KΩ ±5% 1/4W	
Rh15,16	PD14BY2E363J	Carbon 36KΩ ±5% 1/4W	
Rh17,18	PD14BY2E113J	Carbon 11KΩ ±5% 1/4W	
Rh19~22	PD14BY2E105J	Carbon 1MΩ ±5% 1/4W	
Rh23,24	PD14BY2E222J	Carbon 2.2KΩ ±5% 1/4W	
SWITCH			
S10,11 13~15	S32-4006-05	Lever (4 keys) x 5	
S12	S32-2012-05	Lever (2 keys)	
MISCELLANEOUS			
–	E19-0302-05	Mini-connector (3P) x 6	
–	E19-0401-05	Mini-connector (4P) x 4	
–	E19-0602-05	Mini-connector (6P) x 2	
–	J20-0287-13	Pushbutton switch mounting hardware	

■ LEVER SELECTOR (X13-1860-10)

Ref. No.	Parts No.	Description	Re-marks
RESISTOR			
Rp1,2,5,6	PD14BY2E472J	Carbon 4.7KΩ ±5% 1/4W	
SWITCH			
S9	S32-6002-05	Lever (6 keys)	
MISCELLANEOUS			
–	E19-0302-05	Mini-connector (3P)	
–	E19-0401-05	Mini-connector (4P) x 2	
–	E19-0503-05	Mini-connector (5P)	
–	J20-0288-24	Pushbutton switch mounting hardware	

■ RELAY (X13-1870-10)

Ref. No.	Parts No.	Description	Re-marks
CAPACITOR			
Cq1	CE04W1E470M	Electrolytic 47μF 25WV	
RESISTOR			
Rq1	PD14BY2E560J	Carbon 56Ω ±5% 1/4W	
Rq2	PD14BY2E134J	Carbon 130KΩ ±5% 1/4W	
Rq3	PD14BY2E334J	Carbon 330KΩ ±5% 1/4W	
Rq4	PD14BY2E563J	Carbon 56KΩ ±5% 1/4W	
SEMICONDUCTOR			
Qq1		2SC1416 (GR)	
Qq2		2SD220	

Ref. No.	Parts No.	Description	Re-marks
Dq1,2		V06B	
MISCELLANEOUS			
RLq1	S51-2031-05	Relay (24V)	
–	E19-0302-05	Mini-connector (3P)	
–	E19-0401-05	Mini-connector (4P) x 3	

PC BOARD

▼ POWER SUPPLY (X00-1470-10)

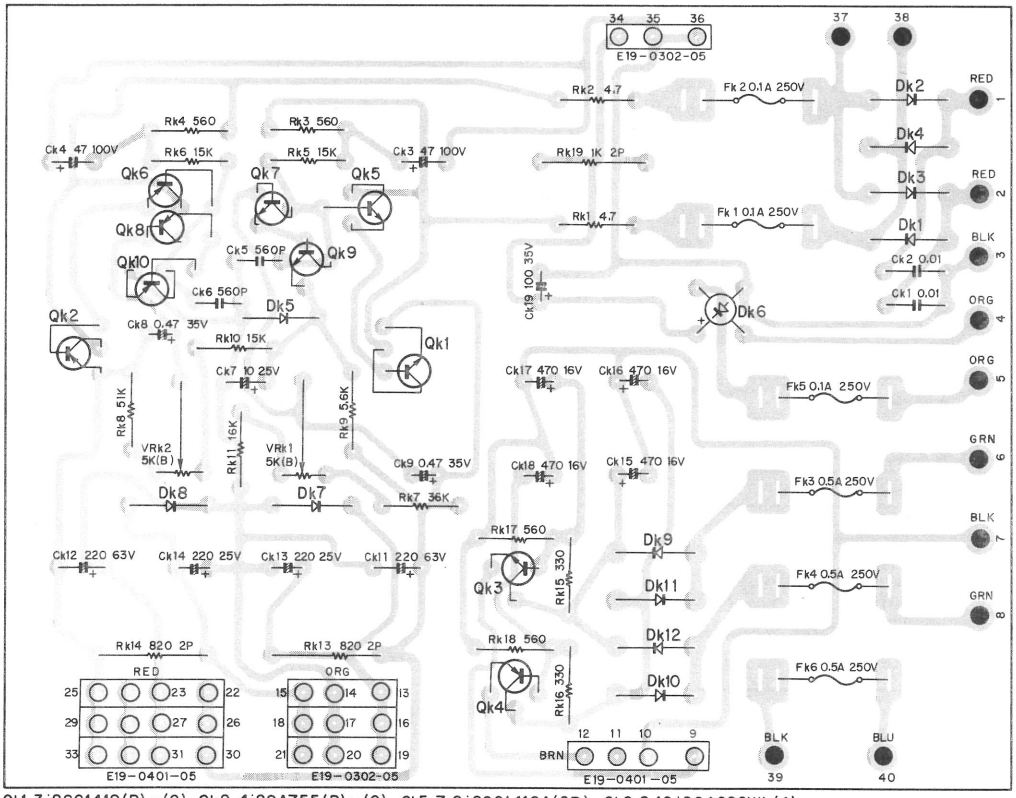

Qk1,3:2SC1419(B)or(C), Qk2,4:2SA755(B)or(C), Qk5,7,9:2SC1416A(GR), Qk6,8,10:2SA620WL(4)
Dk1~4 :V03C, Dk5:YZ-140, Dk6:W04M, Dk7,8:CZ-245, Dk9~12:V06B

▼ RIAA EQUALIZER AMP (X08-1240-00)

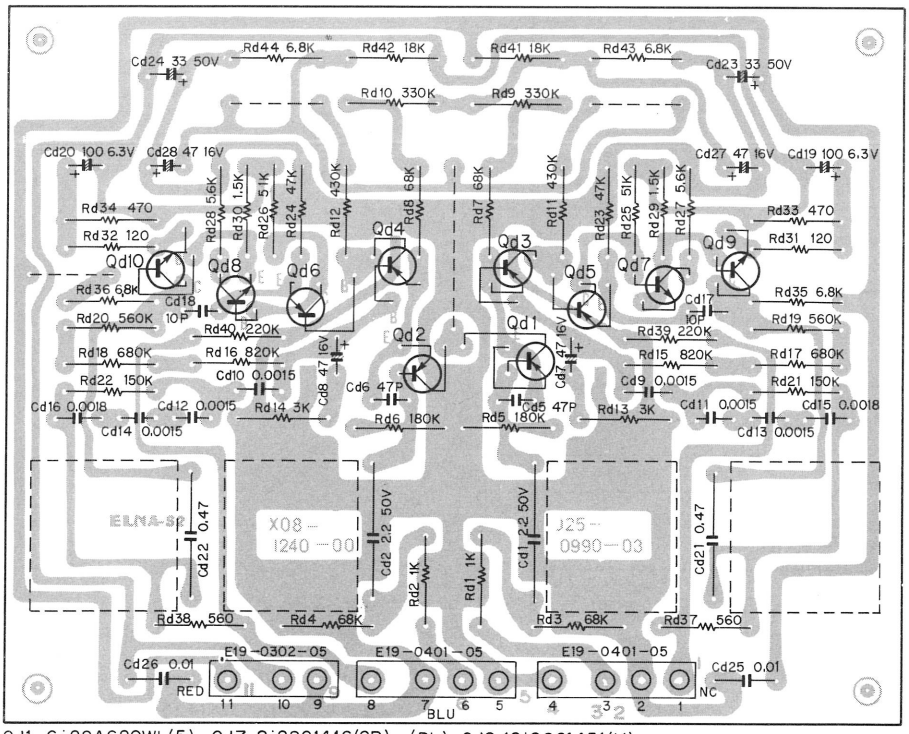

Qd1~6:2SA620WL(5), Qd7,8:2SC1416(GR)or(BL), Qd9,10:2SC1451(V)

PC BOARD

▼ MIC AMP (X08-1260-00)

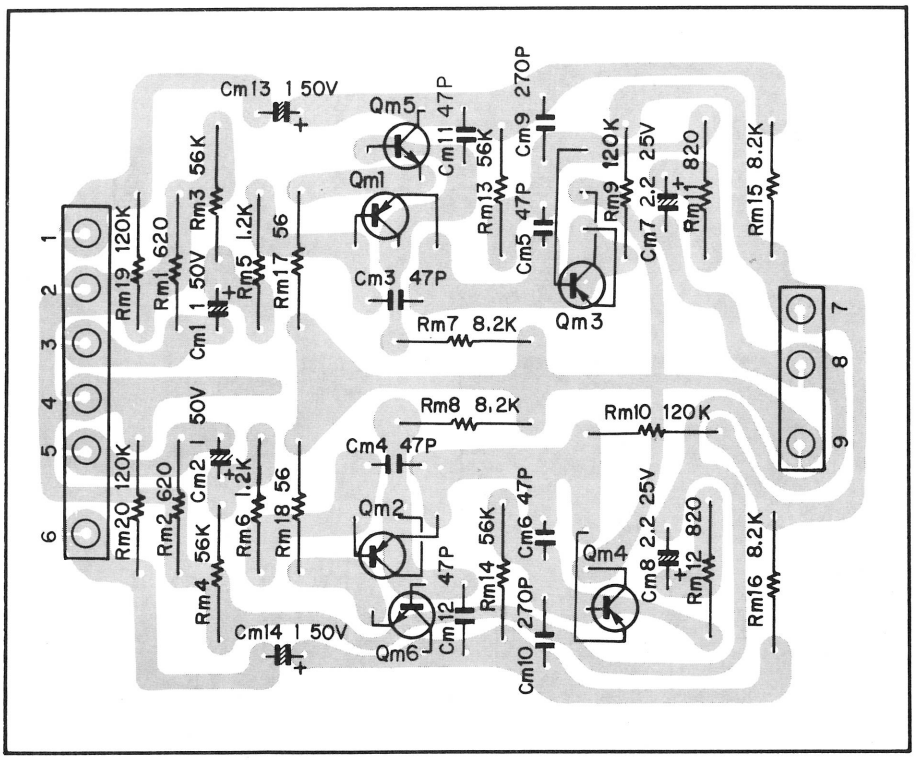

Qm1~4:2SA620WL(4)or(5), Qm5,6:2SC1416A(GR)or(BL)

▼ TONE AMP (X11-1220-00)

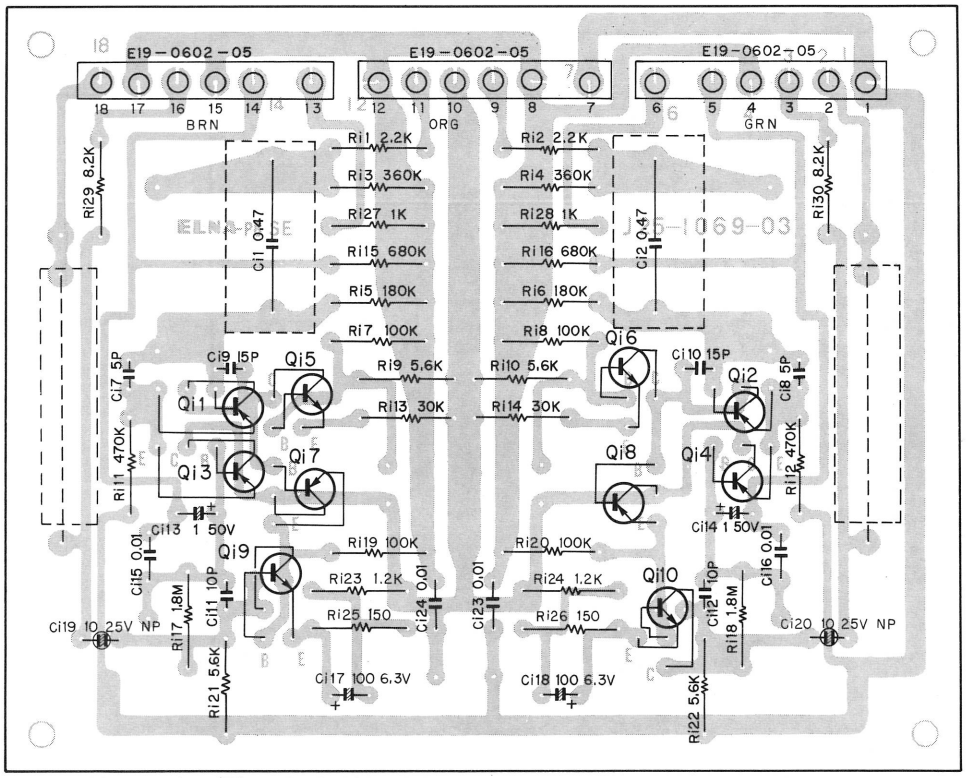

Q1~4,7,8:2SA620WL(5), Qi5,6,9,10:2SC1416GR

PC BOARD

▼ FILTER AMP (X12-1070-00)

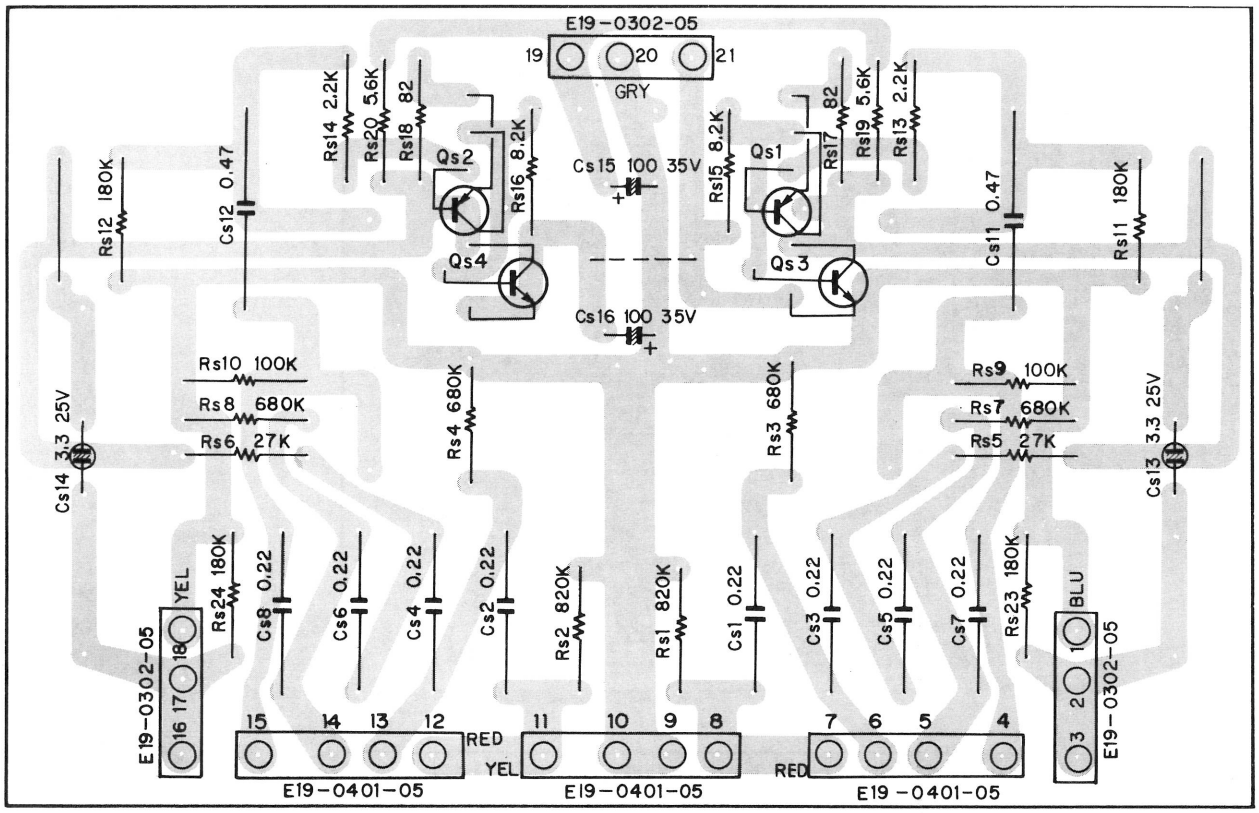

Qs1,2:2SA620WL(4)or(5), Qs3,4:2SC1416A(GR)or(BL)

▼ HEADPHONE AMP (X13-1690-00)

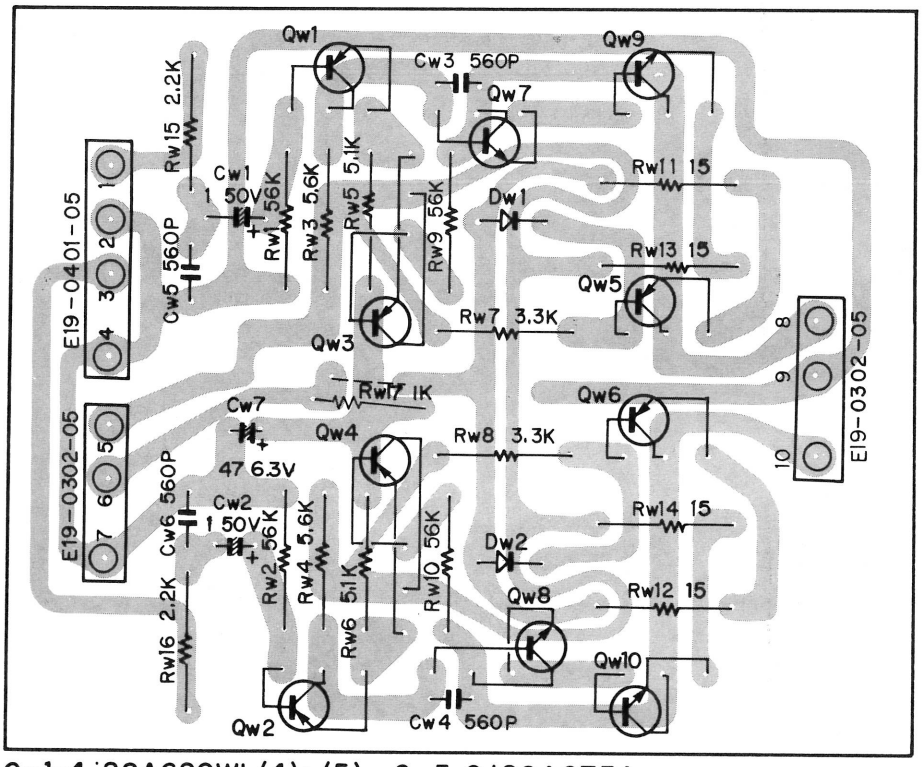

Qw1~4:2SA620WL(4)or(5), Qw5,6:2SA673A
Qw7,8:2SC945(P)or(Q)or(R), Qw9,10:2SC1213A
Dw1,2:STV-3H

PC BOARD

▼ BUFFER AMP (X13-1700-00)

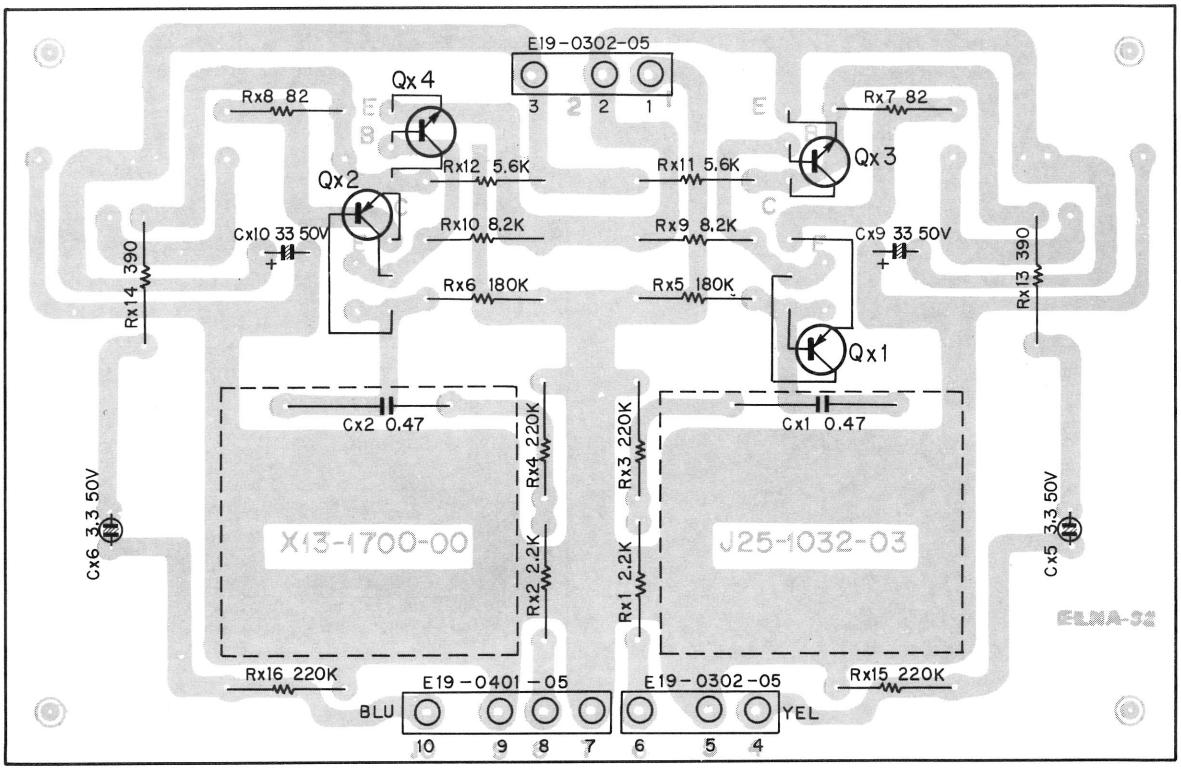

Qx1,2:2SA620WLH(4)or(5), Qx3,4:2SC1451(V)

▼ RELAY (X13-1870-10)

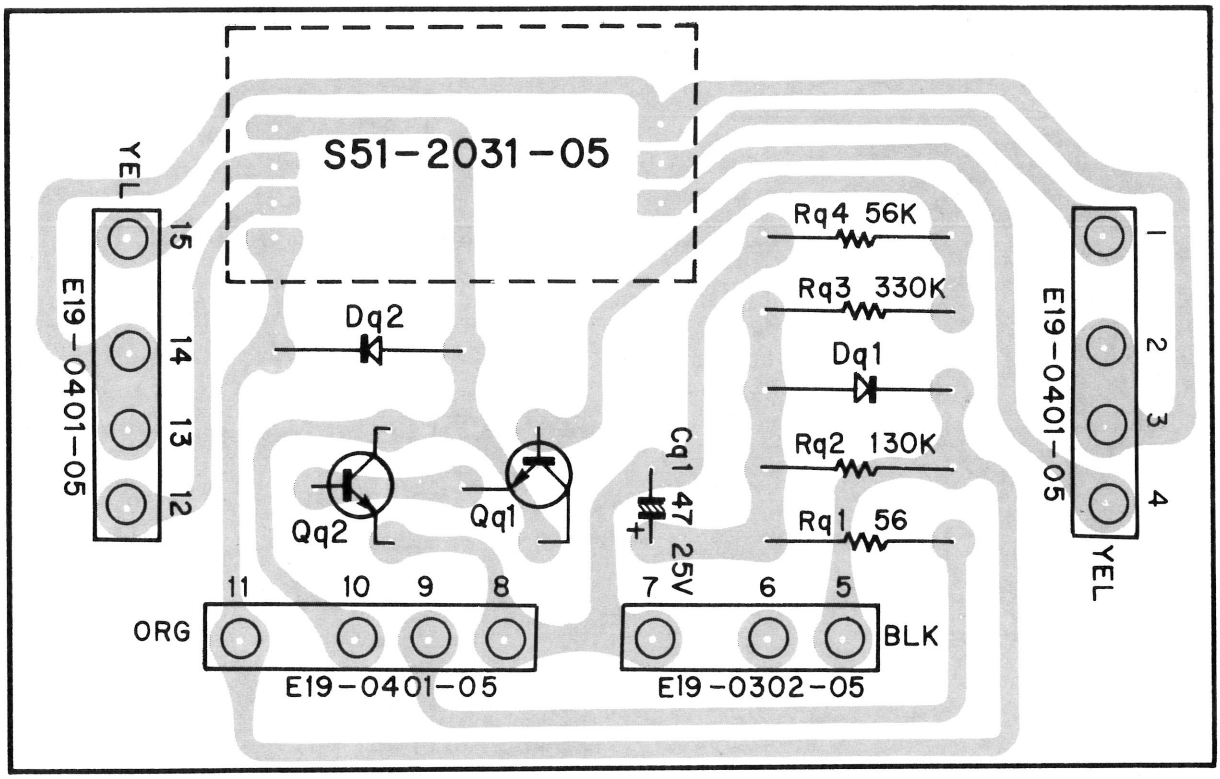

Qq1:2SC1416GR, Qq2:2SD220
Dq1,2:V06B

PC BOARD

▶ LEVER SWITCH (X13-1850-10)

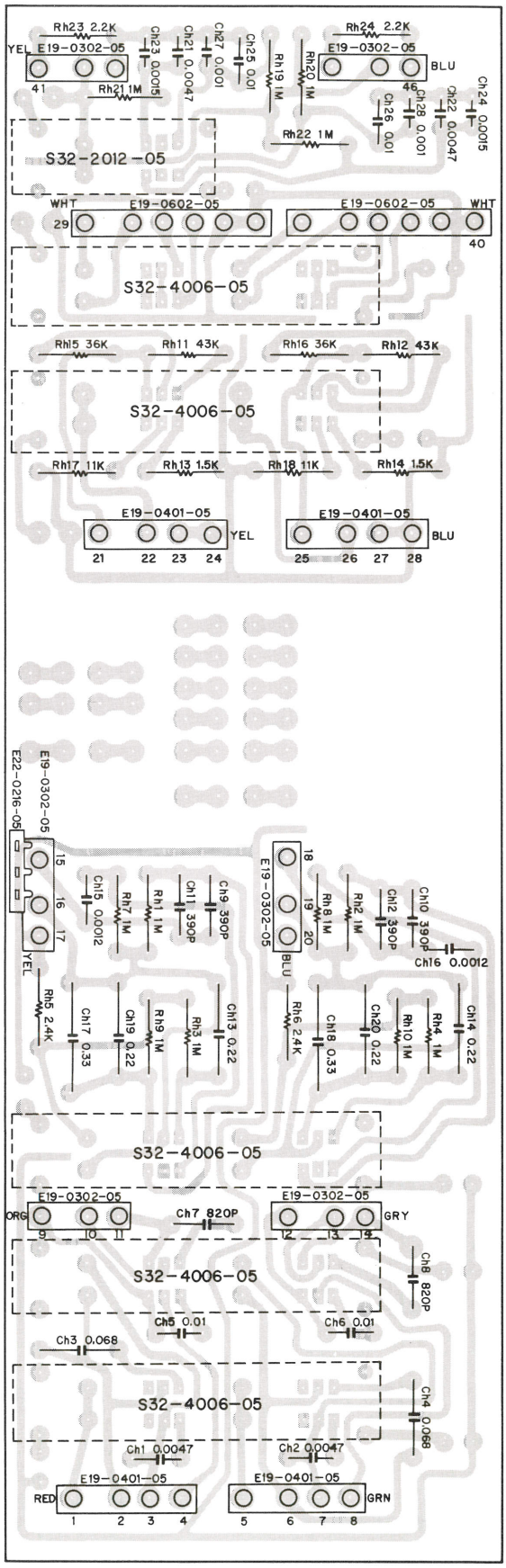

▼ LEVER SELECTOR (X13-1860-10)

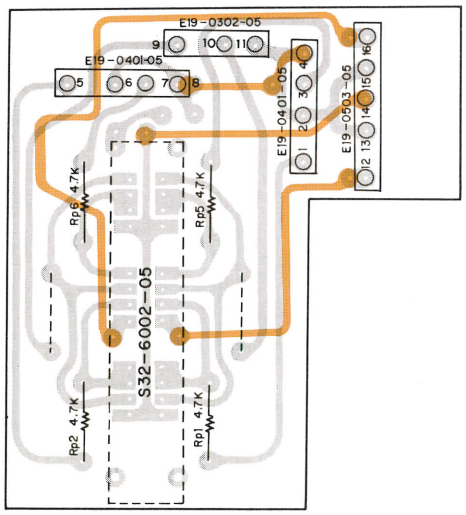

TROUBLESHOOTING

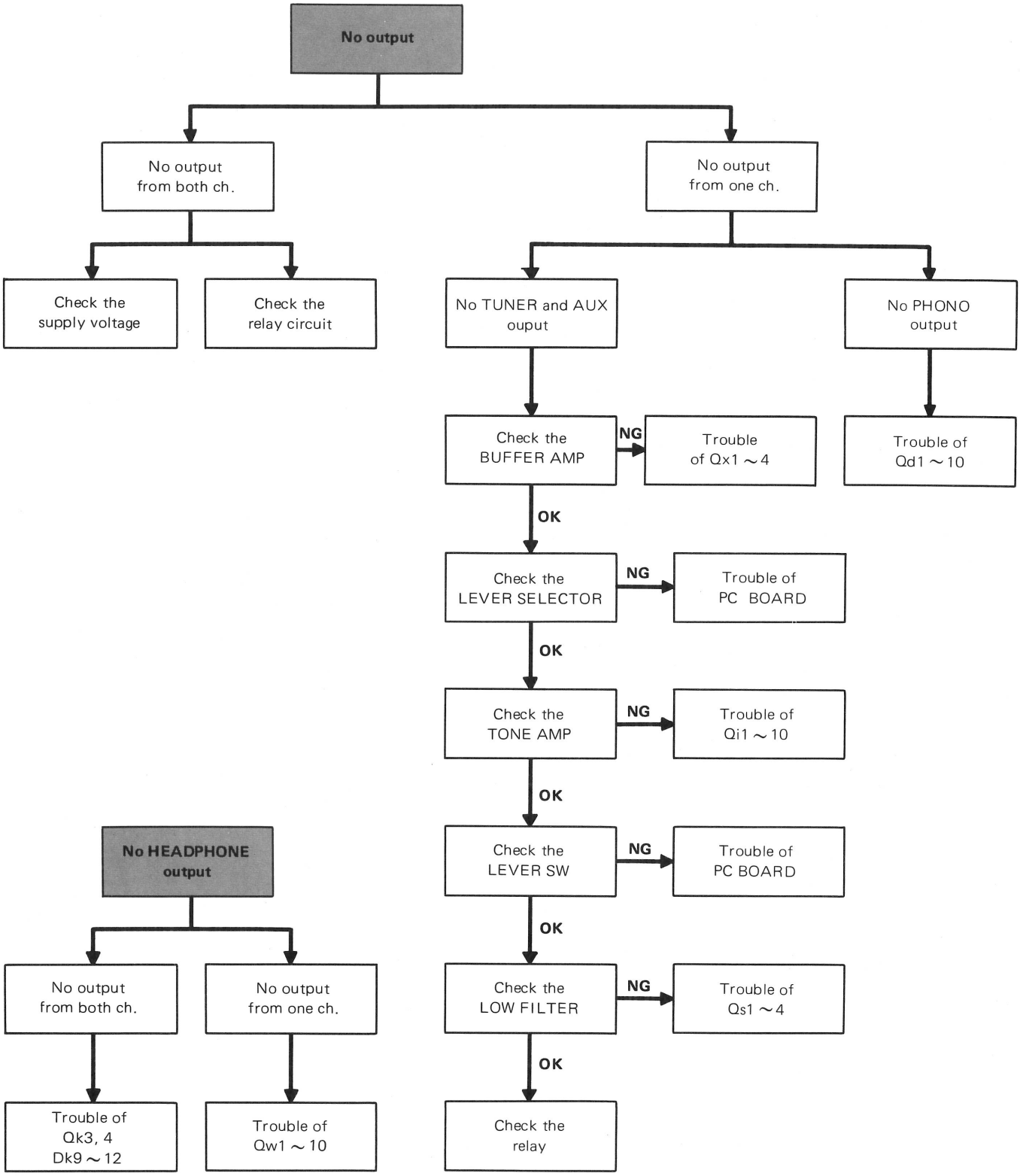

MODIFICATIONS

REVISED CIRCUITS

For the sets sold in Europe. **W TYPE**

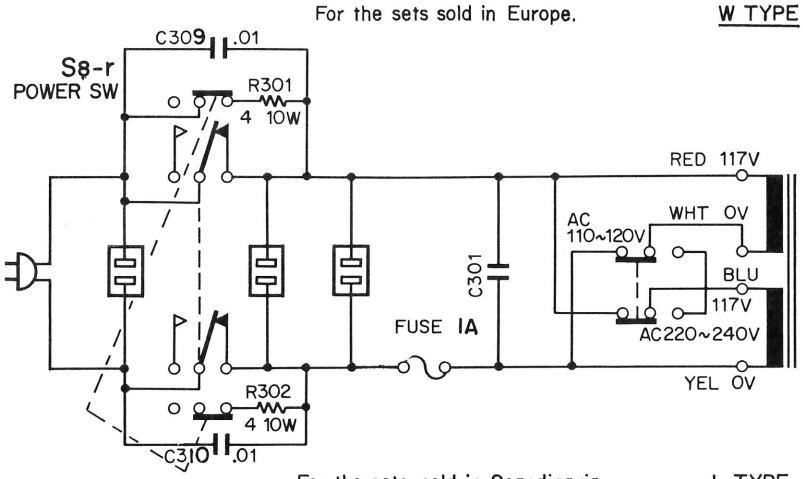

For the sets sold in Scandinavia. **L TYPE**

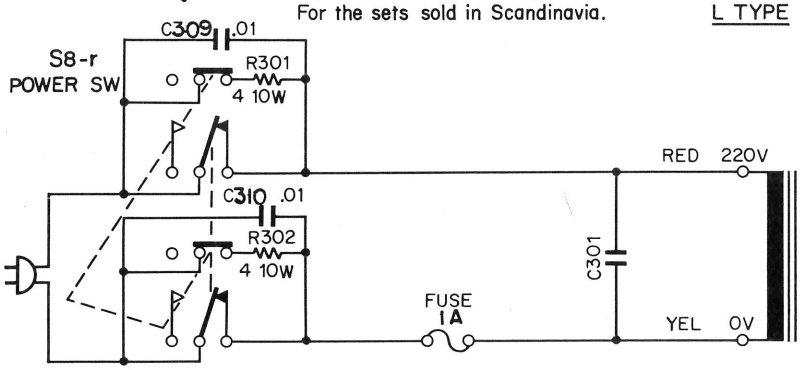

For the sets sold in PX, and areas except designated **U,M TYPE**

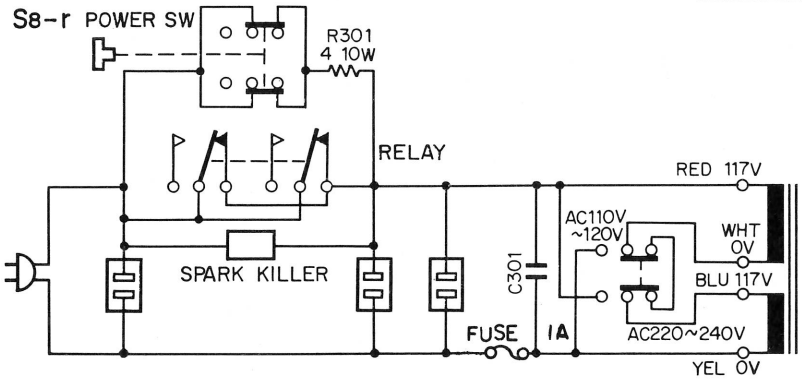

SEMICONDUCTOR SUBSTITUTIONS & LEADS

SEMICONDUCTOR	SUBSTITUTIONS
(X00-1470-10)	
2SA620WL (4)	–
2SA755	2SA671, 2SA489
2SC1416A	2SC1000, 2SC1345
2SC1419	2SC1061, 2SC789
(X08-1240-00)	
2SA620WL(5)	–
2SC1416 (GR), (BL)	2SC1000, 2SC1345
2SC1451 (V)	2SC983 (O), (Y)
(X08-1260-00)	
2SA620WL (4), (5)	–
2SC1416A (GR), (BL)	2SC1000, 2SC1345
(X11-1220-00)	
2SA620WL (5)	–
2SC1416 (GR)	2SC1000, 2SC1345

SEMICONDUCTOR	SUBSTITUTIONS
(X12-1070-00)	
2SA620WL (4), (5)	–
2SC1416A (GR), (BL)	2SC1000, 2SC1345
(X13-1690-00)	
2SA620WL (4), (5)	–
2SA673A	2SA743A
2SC945 (P), (Q), (R)	2SC458 (B), (C), (D)
2SC1213A	2SC1212A
(X13-1700-00)	
2SA620WLH (4), (5)	–
2SC1451 (V)	2SC983 (O), (Y)
(X12-1070-00)	
2SA620WL (4), (5)	–
2SC1416A (GR), (BL)	2SC1000, 2SC1345

2SC1416

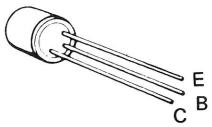

2SA755
2SC789
2SC1061
2SC1419

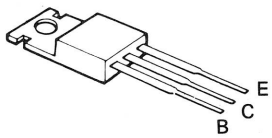

2SA620WL

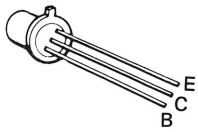

2SA743

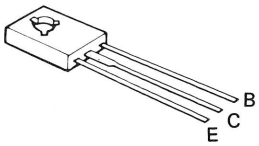

2SC945

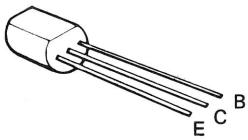

2SC458
2SC1345

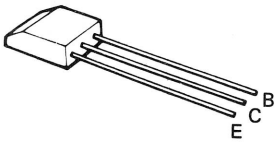

2SC1000

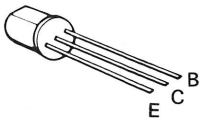

2SA673
2SC1213A

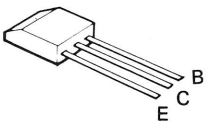

2SC1451

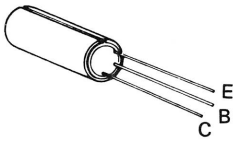

SCHEMATIC DIAGRAM

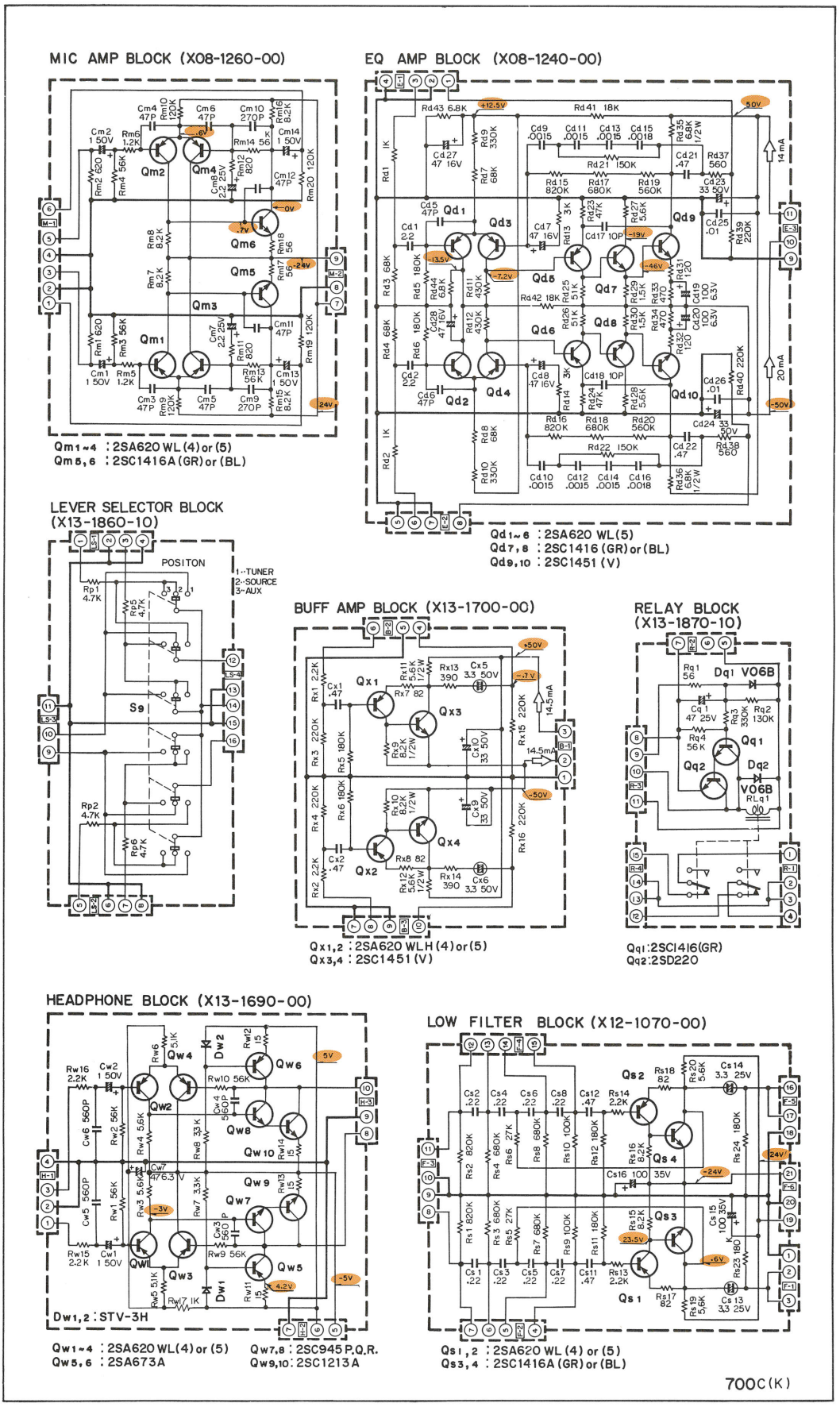

SCHEMATIC DIAGRAM

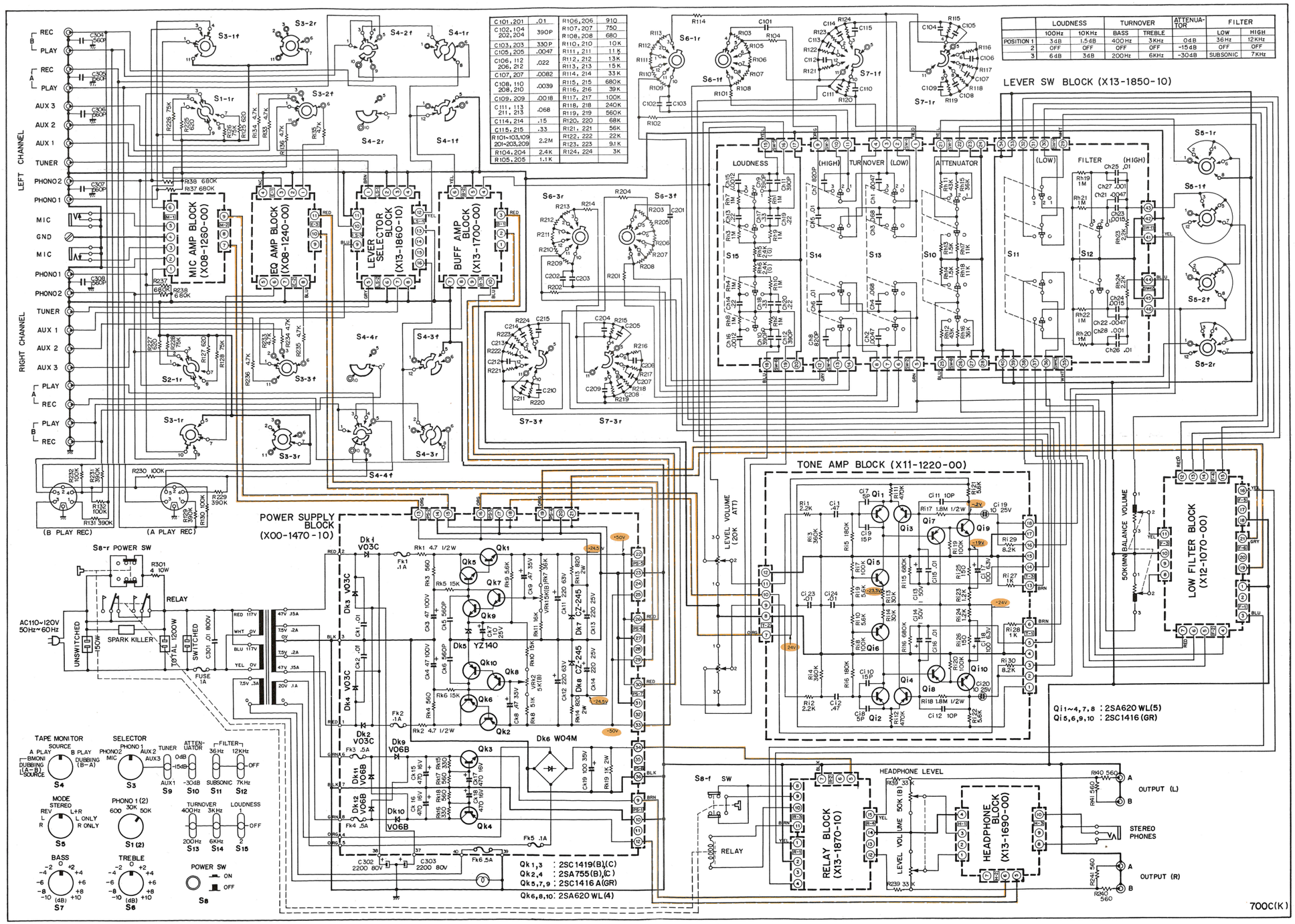

C101, 201	.01	R106, 206	910
C102, 104, 202, 204	390P	R107, 207	750
		R108, 208	680
C103, 203	330P	R110, 210	10K
C105, 205	.0047	R111, 211	11K
C106, 112, 206, 212	.022	R112, 212	13K
		R113, 213	15K
C107, 207	.0082	R114, 214	33K
C108, 110, 208, 210	.0039	R115, 215	680K
		R116, 216	39K
C109, 209	.0018	R117, 217	100K
C111, 113, 211, 213	.068	R118, 218	240K
		R119, 219	560K
C114, 214	.15	R120, 220	68K
C115, 215	.33	R121, 221	56K
R101~103, 109	2.2M	R122, 222	22K
201~203, 209		R123, 223	9.1K
R104, 204	2.4K	R124, 224	3K
R105, 205	1.1K		

	LOUDNESS		TURNOVER		ATTENUATOR	FILTER	
	100Hz	10KHz	BASS	TREBLE		LOW	HIGH
POSITION 1	3dB	1.5dB	400Hz	3KHz	0dB	36Hz	12KHz
2	OFF	OFF	OFF	OFF	-15dB	OFF	OFF
3	6dB	3dB	200Hz	6KHz	-30dB	SUBSONIC	7KHz

KENWOOD

STEREO CONTROL AMPLIFIER

MODEL-700C

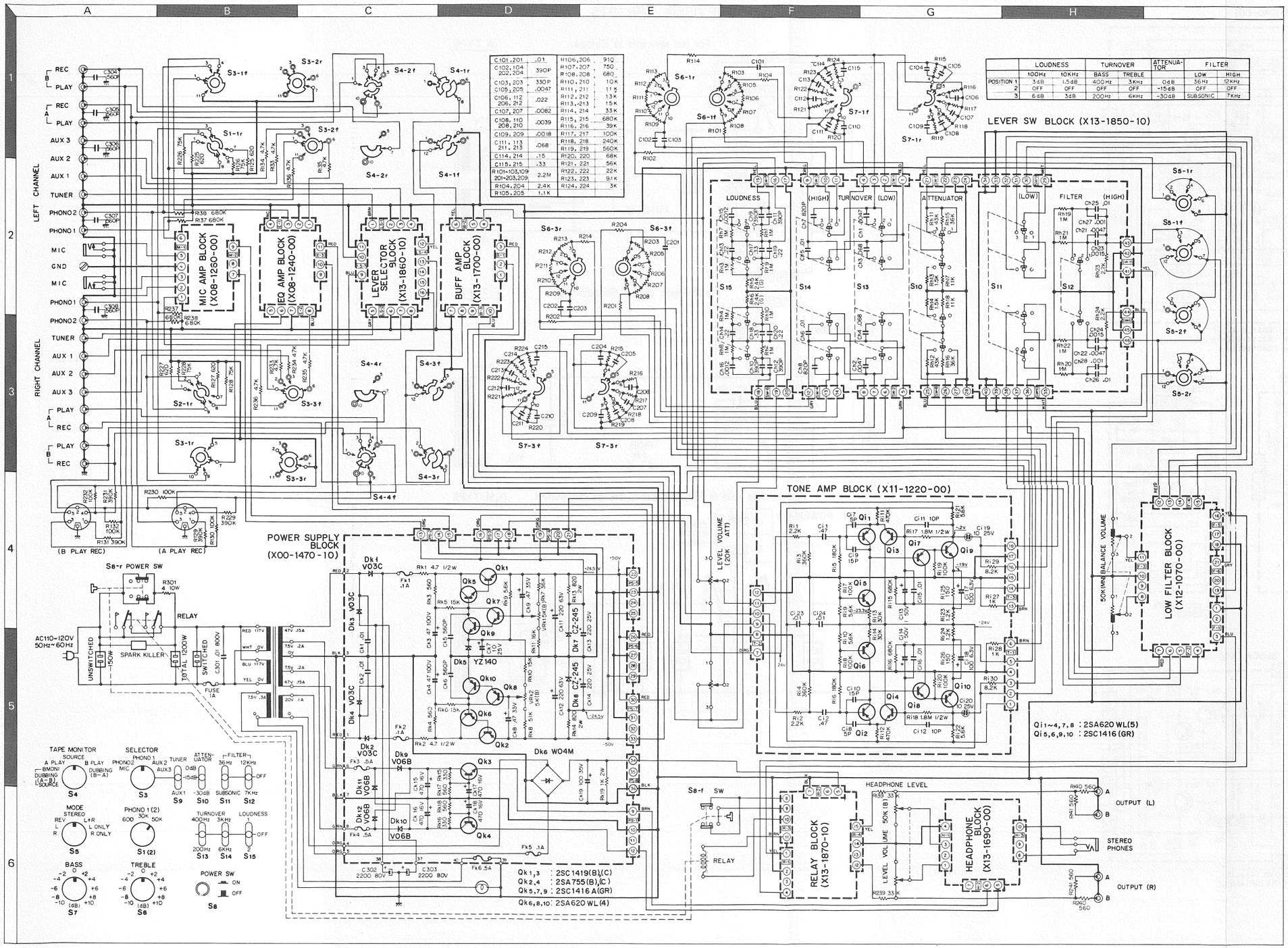

SPECIFICATIONS

Total Harmonic Distortion	0.04% at rated output voltage into 50 kΩ	
Inter Modulation Distortion (60 Hz : 7 kHz = 4 : 1)	0.04% at rated output voltage into 50 kΩ	
Input Sensitivity and Impedance		
Phono 1	2.5 mV. 50 K ohms 30 K ohms 600 ohms	
Phono 2	2.5 mV. 50 K ohms 30 K ohms 600 ohms	
Tuner	150 mV. 100 K ohms	
AUX 1, 2, 3	150 mV. 100 K ohms	
Tape Play A, B	150 mV. 100 K ohms	
Mic	2.5 mV. 600 ohms	
Maximum Input Voltage (rms)		
Phono 1, 2	400 mV	T.H.D. 0.1% at 1,000 Hz
Signal to Noise Ratio (IHF)		
Phono 1, 2 into 5 mV	70 dB	
Tuner	85 dB	
AUX 1, 2, 3	85 dB	
Tape Play A, B	85 dB	
Mic	70 dB	
Attenuator	0 dB −15 dB −30 dB	
Output Voltage and Impedance		
Tape Rec. A, B (Pin)	150 mV	4.7 K ohms
(Din connector)	30 mV	80 K ohms
Pre-out A, B	1.5 V	600 ohms
Frequency Response		
Phono 1, 2	RIAA Standard Curve ±0.3 dB	
Tuner, AUX, Tape Play	20 Hz ~ 20 kHz $^{+0}_{-0.3}$ dB	
Tone Controls		
Bass Turnover 200 Hz	±10 dB at 50 Hz	
400 Hz	±10 dB at 100 Hz	
Treble Turnover 3 kHz	±10 dB at 10,000 Hz	
6 kHz	±10 dB at 20,000 Hz	
Loudness Control (VR Max. −30 dB)	$^{13.0}_{26.0}$ dB at 100 Hz	
	$^{11.5}_{23.0}$ dB at 10,000 Hz	
Low Filter 36 Hz	12 dB/oct	
18 Hz	12 dB/oct	
High Filter 7 kHz	6 dB/oct	
12 kHz	6 dB/oct	
Phones Out	Max. 0.4V 20 mW 8 ohms	

GENERAL

Switches	
Input Selector	MIC, Phono 1, 2, Aux. 1, 2, 3, Tuner
Mode	R, L, REV, STEREO, L + R, L Only, R Only
Tape Monitor	SOURCE, A PLAY, B PLAY, DUBBING (A→B) B MON, DUBBING (A→B) SOURCE, DUBBING (B→A)
AC Outlet	Switched 2, Unswitched 1
Power Consumption	10 watts
Dimensions	W 17-5/16" (440mm), H 5-11/16" (145mm), D 11-13/16"(300mm)
Weight	20.9 lbs. (9.5 kg)

MIC AMP BLOCK (X08-1260-00)

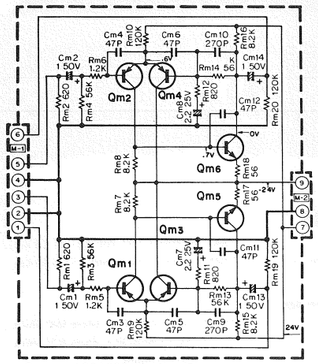

Qm1~4 : 2SA620 WL(4) or (5)
Qm5,6 : 2SC1416A (GR) or (BL)

EQ AMP BLOCK (X08-1240-00)

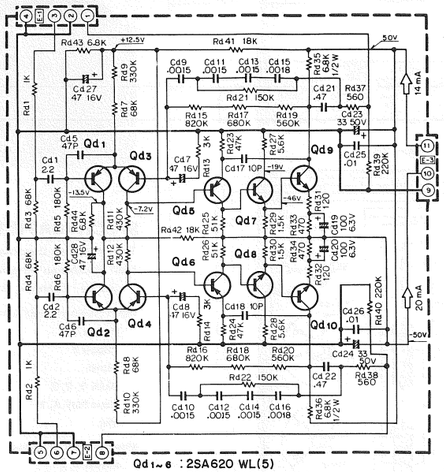

Qd1~6 : 2SA620 WL(5)
Qd7,8 : 2SC1416 (GR) or (BL)
Qd9,10 : 2SC1451 (V)

LEVER SELECTOR BLOCK (X13-1860-10)

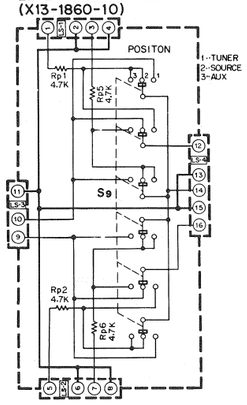

BUFF AMP BLOCK (X13-1700-00)

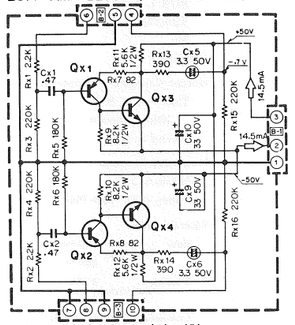

Qx1,2 : 2SA620 WLH (4) or (5)
Qx3,4 : 2SC1451 (V)

RELAY BLOCK (X13-1870-10)

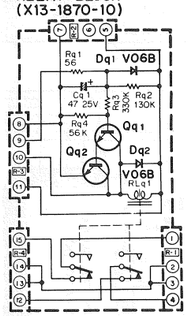

Qq1 : 2SC1416 (GR)
Qq2 : 2SD220

HEADPHONE BLOCK (X13-1690-00)

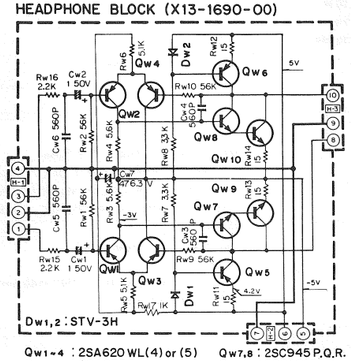

Dw1,2 : STV-3H

Qw1~4 : 2SA620 WL(4) or (5)
Qw5,6 : 2SA673A
Qw7,8 : 2SC945 P.Q.R.
Qw9,10 : 2SC1213A

LOW FILTER BLOCK (X12-1070-00)

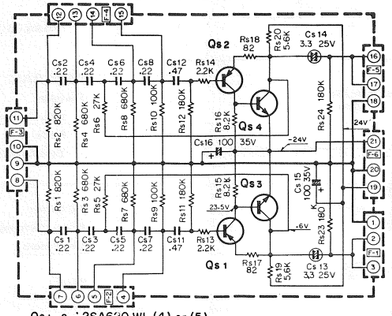

Qs1,2 : 2SA620 WL (4) or (5)
Qs3,4 : 2SC1416A (GR) or (BL)

MODEL-700C

REVISED CIRCUITS

For the sets sold in Europe. **W TYPE**

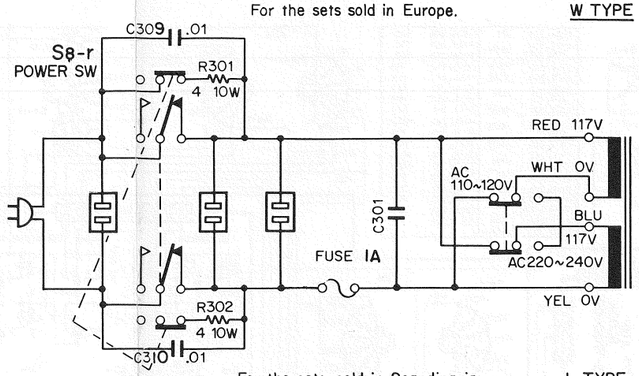

For the sets sold in Scandinavia. **L TYPE**

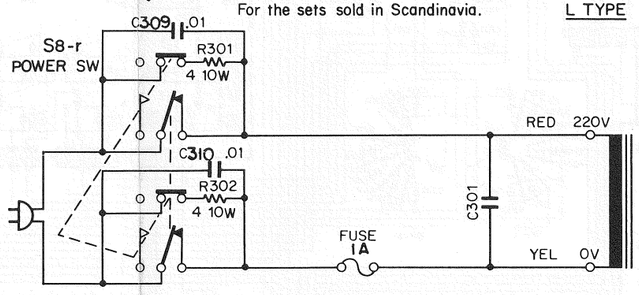

For the sets sold in PX, and areas except designated **U,M TYPE**

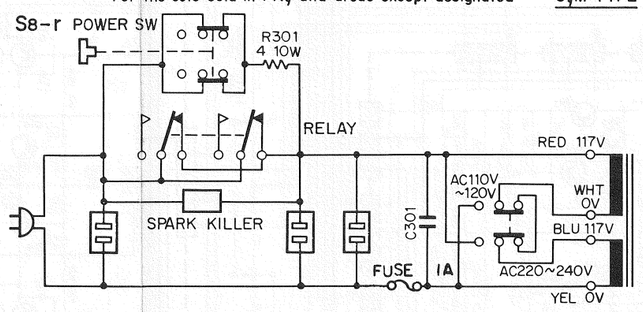

SPECIFICATIONS

Total Harmonic Distortion	0.04% at rated output voltage into 50 kΩ	
Inter Modulation Distortion (60 Hz : 7 kHz = 4 : 1)	0.04% at rated output voltage into 50 kΩ	
Input Sensitivity and Impedance		
Phono 1	2.5 mV. 50 K ohms 30 K ohms 600 ohms	
Phono 2	2.5 mV. 50 K ohms 30 K ohms 600 ohms	
Tuner	150 mV. 100 K ohms	
AUX 1, 2, 3	150 mV. 100 K ohms	
Tape Play A, B	150 mV. 100 K ohms	
Mic	2.5 mV. 600 ohms	
Maximum Input Voltage (rms)		
Phono 1, 2	400 mV	T.H.D. 0.1% at 1,000 Hz
Signal to Noise Ratio (IHF)		
Phono 1, 2 into 5 mV	70 dB	
Tuner	85 dB	
AUX 1, 2, 3	85 dB	
Tape Play A, B	85 dB	
Mic	70 dB	
Attenuator	0 dB −15 dB −30 dB	
Output Voltage and Impedance		
Tape Rec. A, B (Pin)	150 mV	4.7 K ohms
(Din connector)	30 mV	80 K ohms
Pre-out A, B	1.5 V	600 ohms
Frequency Response		
Phono 1, 2	RIAA Standard Curve ±0.3 dB	
Tuner, AUX, Tape Play	20 Hz ~ 20 kHz $^{+0}_{-0.3}$ dB	

Tone Controls		
Bass Turnover	**200 Hz**	±10 dB at 50 Hz
	400 Hz	±10 dB at 100 Hz
Treble Turnover	**3 kHz**	±10 dB at 10,000 Hz
	6 kHz	±10 dB at 20,000 Hz
Loudness Control (VR Max. −30 dB)		$^{13.0}_{26.0}$ dB at 100 Hz
		$^{11.5}_{23.0}$ dB at 10,000 Hz
Low Filter	**36 Hz**	12 dB/oct
	18 Hz	12 dB/oct
High Filter	**7 kHz**	6 dB/oct
	12 kHz	6 dB/oct
Phones Out		Max. 0.4V 20 mW 8 ohms

GENERAL

Switches	
Input Selector	MIC, Phono 1, 2, Aux. 1, 2, 3, Tuner
Mode	R, L, REV, STEREO, L + R, L Only, R Only
Tape Monitor	SOURCE, A PLAY, B PLAY, DUBBING (A→B) B MON, DUBBING (A→B) SOURCE, DUBBING (B→A)
AC Outlet	Switched 2, Unswitched 1
Power Consumption	10 watts
Dimensions	W 17-5/16" (440mm), H 5-11/16" (145mm), D 11-13/16"(300mm)
Weight	20.9 lbs. (9.5 kg)

KENWOOD ELECTRONICS, INC.

- 15777 SOUTH BROADWAY, GARDENA, CALIFORNIA 90248 U.S.A.
- 72-02 51ST AVENUE, WOODSIDE. N.Y. 11377 U.S.A.

TRIO-KENWOOD ELECTRONICS, N.V.

- HARENSESTEENWEG, 484. 1800 VILVOORDE,BELGIUM.

TRIO-KENWOOD ELECTRONICS, GmbH.

- 6056 HEUSENSTAMM, AM GOLDBERG 5, WEST GERMANY.

TRIO ELECTRONICS, INC.

- 3-6-17 AOBADAI, MEGURO-KU, TOKYO, JAPAN.