KENWOOD

HI/FI STEREO COMPONENTS

SERVICE MANUAL

. . . the sound

approach

to quality

MODEL TK-40

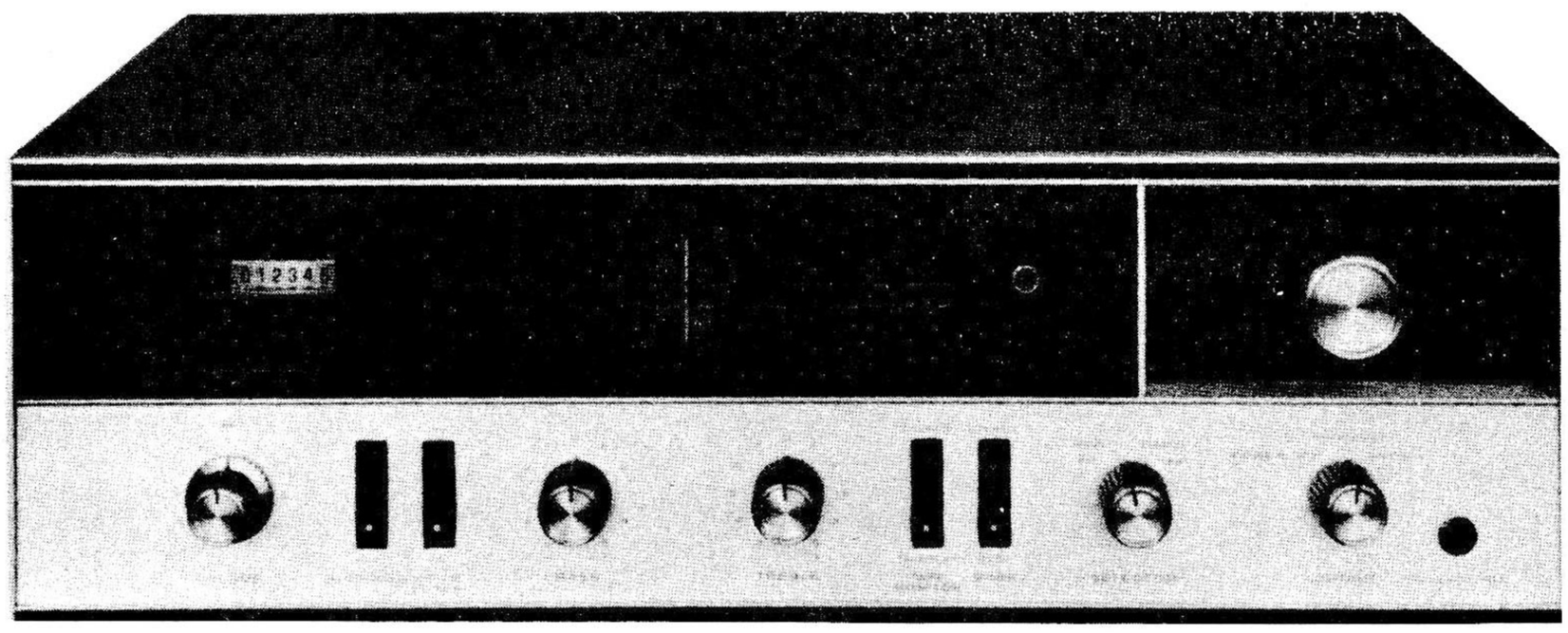

SOLID STATE
AM-FM STEREO RECEIVER

www.hifiengine.com

PARTS DESCRIPTION LIST

RF (UA11013B) SECTION

● CAPACITORS

Symbol No.	Description	
C1	Ceramic	0.001mfd±20%
C2	Ceramic	20mmfd±10%
C3	Ceramic	0.01mfd+100%, -0%
C4	Ceramic	18mmfd±10%
C5	Ceramic	0.01mfd+100%, -0%
C6,7	Ceramic	5mmfd±10%
C8	Ceramic	15mmfd±10%
C9	Ceramic	470mmfd±20%
C10,11	Ceramic	0.01mfd+100%, -0%
C12	Ceramic	10mmfd±10%
C13	Ceramic	0.01mfd+100%, -0%
C14	Ceramic	12mmfd±10%
C15,16	Ceramic	0.01mfd+100%, -0%
CT1~3	Cylinder TRIMMER	C08-100D

● RESISTORS

Symbol No.	Description	
R1	Composition	1K±10% 1/3W
R2	Composition	2.2K±10% 1/3W
R3	Composition	8.2K±10% 1/3W
R4	Composition	220ohm±10% 1/3W
R5	Composition	15K±10% 1/3W
R6	Composition	2.2K±10% 1/3W
R7	Composition	1.5K±10% 1/3W
R8	Composition	5.6K±10% 1/3W
R9	Composition	220ohm±10% 1/3W
R10	Composition	2.2K±10% 1/3W
R11	Composition	1K±10% 1/3W
R12	Composition	2.2K±10% 1/3W
R13	Composition	8.2K±10% 1/3W

● COILS/TRANSFORMER

Symbol No.	Description	Part No.
L1	FM ANT Coil	L24-UA11013A
L2	FM RF Coil	L24-UA11013RA
L3	FM RF Coil	L24-UA11013RB
L4	FM OSC Coil	L24-UA11013S
L5	Choke Coil	L20-010
T1	FM IFT	L52-10

● TRANSISTORS

Symbol No.	Description	
Q1	2SA240	FM RF Amp.
Q2	2SA239	FM MIXER
Q3	2SA240	FM OSC

IF (UA12024A) SECTION

● CAPACITORS

Symbol No.	Description	
C1	Ceramic	0.04mfd+100%, -0%
C2	Ceramic	0.01mfd+100%, -0%
C3,4	Ceramic	0.04mfd+100%, -0%
C5	Ceramic	0.01mfd+100%, -0%
C6	Ceramic	0.04mfd+100%, -0%
C7	Polystiyrole	1000mmfd±5%
C8~10	Ceramic	0.01mfd+100%, -0%
C11	Polystiyrole	1000mmfd±5%
C12,13	Ceramic	0.01mfd+100%, -0%
C14	Ceramic	30mmfd±10%
C15~18	Ceramic	0.01mfd+100%, -0%
C19,20	Ceramic	200mmfd±10%
C21	Ceramic	100mmfd±10%
C22	Ceramic	0.005mfd+100%, -0%
C23	Ceramic	0.02mfd+100%, -0%
C24	Ceramic	10mmfd±10%
C25	Ceramic	330mmfd+100%, -0%
C26,27	Ceramic	0.04mfd+100%, -0%
C28	Ceramic	0.01mfd+100%, -0%
C29	Ceramic	0.002mfd+100%, -0%
C30	Ceramic	0.04mfd+100%, -0%
C31	Electrolytic Tubular	100mfd 15WV
C32	Electrolytic Tubular	10mfd 15WV
C33	Electrolytic Tubular	10mfd 15WV
C35	Ceramic	0.04mfd+100%, -0%
C36,37	Ceramic	0.01mfd+100%, -0%
C38	Polystiyrole	1000mmfd±5%
C39	Electrolytic Tubular	30mfd 15WV

www.hifiengine.com

PARTS DESCRIPTION LIST

● RESISTORS

Symbol No.	Description	
R1	Composition	5.6K±10% 1/3W
R2	Composition	1.2K±10% 1/3W
R3	Composition	22ohm±10% 1/3W
R4	Composition	47K±10% 1/3W
R5	Composition	1K±10% 1/3W
R6	Composition	33K±10% 1/3W
R7	Composition	4.7K±10% 1/3W
R8	Composition	1K±10% 1/3W
R9	Composition	10K±10% 1/3W
R10	Composition	22K±10% 1/3W
R11	Composition	4.7K±10% 1/3W
R12	Composition	1K±10% 1/3W
R14	Composition	22K±10% 1/3W
R15	Composition	4.7K±10% 1/3W
R16	Composition	1K±10% 1/3W
R18	Composition	22K±10% 1/3W
R19	Composition	4.7K±10% 1/3W
R20	Composition	470ohm±10% 1/3W
R21	Composition	1K±10% 1/3W
R22	Composition	470ohm±10% 1/3W
R23,24	Composition	2.2K±10% 1/3W
R25,26	Composition	10K±10% 1/3W
R27	Composition	82K±10% 1/3W
R28	Composition	4.7K±10% 1/3W
R29	Composition	1K±10% 1/3W
R30	Composition	47K±10% 1/3W
R31,32	Composition	5.6K±10% 1/3W
R33	Composition	3.3K±10% 1/3W
R34	Composition	47K±10% 1/3W
R35	Composition	2.2K±10% 1/3W
R36	Composition	3.3K±10% 1/3W
R44	Composition	100K±10% 1/3W
R45	Composition	56K±10% 1/3W
R46	Composition	15K±10% 1/3W

● POTENTIOMETERS

Symbol No.	Description	Part No.
VR1	50K(B) Level Set	R10-64
VR3	20K(B) Indicator Adj.	R10-68

● COILS/TRANSFORMERS

Symbol No.	Description	Part No.
L1	Choke Coil	L20-010
L2	Choke Coil	L20-010
L3	Choke Coil	L20-010
L4	AM OSC Coil	LC7-12
T1	FM IFT 10.7MHz	L02-60
T2	FM IFT 10.7MHz	L02-61
T3	FM IFT 10.7MHz	L02-62
T4	FM IFT 10.7MHz	L02-63
T5	FM IFT 10.7MHz	L02-64
T6	AM IFT 455kHz	L01-63
T7	AM IFT 455kHz	L01-64
T8	AM IFT 455kHz	L01-65

● TRANSISTORS/DIODES

Symbol No.	Description	
Q1	2SA234B	AM-FM IF Amp.
Q2	2SA234B	AM-FM IF Amp.
Q3	2SA234B	AM-FM IF Amp.
Q4	2SA234B	AM-FM IF Amp.
Q5	2SA234B	AM-FM IF Amp.
Q6	2SA354B	AM Convertor
D1	1N60	AM Det.
D2,3	1N60	FM Det.
D4	1N60	OSC Limitter
D5	1N60	AGC Det.
D6	1N60	FM Indicator Rect.
D9	1N60	AM Indicator Rect.

MPX (UA14023A) SECTION

● CAPACITORS

Symbol No.	Description	
C1	Electrolytic Tubular	10mfd 15WV
C2	Polystiyrole	6600mmfd±10%
C3	Ceramic	0.04mfd+100%, -0%
C4	Polystiyrole	6600mmfd±10%
C5	Ceramic	0.04mfd+100%, -0%
C6	Polystiyrole	2500mmfd±10%
C7	Electrolytic Tubular	50mfd 15WV
C8,9	Ceramic	100mmfd±10%
C10,11	Ceramic	2200mmfd+100%, -0%
C12,13	Ceramic	470mmfd+100%, -0%
C14	Electrolytic Tubular	10mfd 15WV
C15	Polystiyrole	470mmfd±10%
C16	Polystiyrole	120mmfd±10%
C17,18	Ceramic	0.04mfd+100%, -0%
C19	Ceramic	560mmfd+100%, -0%
C20	Mylar	0.1mfd±20%
C21	Polystirole	1000mmfd±10%

www.hifiengine.com

PARTS DESCRIPTION LIST

Symbol No.	Description	
C22	Ceramic	560mmfd+100%, -0%
C23	Mylar	0.1mfd±20%
C24	Electrolytic Tubular	10mfd 15WV
C25	Electrolytic Tubular	1mfd 25WV
CT1	Cylinder TRIMMER	20mmfd~40mmfd

● RESISTORS

Symbol No.	Description	
R1	Composition	270K±10% 1/2W
R2	Composition	220K±10% 1/2W
R3	Composition	4.7K±10% 1/2W
R4	Composition	22K±10% 1/2W
R5	Composition	1.8K±10% 1/2W
R6	Composition	180ohm±10% 1/2W
R7	Composition	10K±10% 1/2W
R8	Composition	22K±10% 1/2W
R9	Composition	3.3K±10% 1/2W
R10	Composition	220ohm±10% 1/2W
R11~16	Composition	22K±5% 1/2W
R17~19	Composition	15K±10% 1/2W
R20	Composition	10K±10% 1/2W
R21	Composition	470K±10% 1/2W
R22	Composition	6.8K±10% 1/2W
R23	Composition	470ohm±10% 1/2W
R24	Composition	1M±10% 1/2W
R25	Composition	100K±10% 1/2W
R26	Composition	100K±10% 1/2W
R27	Composition	15K±10% 1/2W
R28	Composition	220ohm±10% 1/2W
R29	Composition	4.7K±10% 1/2W
R30,31	Composition	22K±10% 1/2W
R32	Composition	4.7K±10% 1/2W

● POTENTIOMETER

Symbol No.	Description	Part No.
VR1	50K(B) Level Set	R10-56

● COILS

Symbol No.	Description	Part No.
L1	19kHz Tune Coil 10mH	L17-04
L2	19kHz Tune Coil 10mH	L17-05
L3	38kHz Tune Coil	L17-43
L4	Filter Coil 10mH	L17-44
L5	Filter Coil 39mH	L17-29
L6	19kHz Tune Coil 100mH	L17-23

● TRANSISTORS/DIODES

Symbol No.	Description	
Q1	2SC281B	Composite Amp.
Q2	2SC281B	19kHz Amp.
Q3	2SC281B	38kHz Amp.
Q4	2SC281B	19kHz Beacon Signal Amp.
Q5	2SC281B	DC Amp.
Q6	2SB54	DC Amp.
Q7	2SC281B	Switching
D1,2	1N60	Doubler
D3~6	1N60	MPX Det.
D7	1N60	Noise Cancel
D8	1N60	MPX Det.
D9	1N60	Switching
TH1	SDT-1000	Stabilizer

PRE AMP (UA13241D) SECTION

● CAPACITORS

Symbol No.	Description	
C1	Electrolytic Tubular	100mfd 6WV
C2,3	Aluminum Solid Electrolytic	3.3mfd 10WV
C4,5	Electrolytic Tubular	10mfd 15WV
C8,9	Mylar	3300mmfd±20%
C10,11	Mylar	0.01mfd±20%
C12,13	Ceramic	100mmfd±10%
C14,15	Electrolytic Tubular	50mfd 3WV
C16,17	Electrolytic Tubular	5mfd 15WV
C18,19	Electrolytic Tubular	50mfd 25WV
C20~23	Electrolytic Tubular	10mfd 15WV
C24	Ceramic	0.005mfd±20%
C25	Electrolytic Tubular	100mfd 3WV
C26,27	Ceramic	560mmfd±10%

● RESISTORS

Symbol No.	Description	
R1,2	Composition	2.2K±10% 1/2W
R3,4	Composition	220K±10% 1/2W
R5	Composition	3.9K±10% 1/2W
R6	Composition	10K±10% 1/2W

www.hifiengine.com

PARTS DESCRIPTION LIST

Symbol No.	Description	
R7,8	Composition	15K±10% 1/4W
R9,10	Composition	470ohm±10% 1/2W
R13,14	Composition	24K±5% 1/4W
R15,16	Composition	750K±5% 1/2W
R17,18	Composition	560K±10% 1/4W
R19,20	Composition	5.6K±10% 1/2W
R21,22	Composition	820ohm±10% 1/2W
R23,24	Composition	1M±10% 1/2W
R25,26	Composition	47K±10% 1/2W
R27,28	Composition	470ohm±10% 1/2W
R29,30	Composition	5.6K±10% 1/4W
R31,32	Composition	100ohm±10% 1/2W
R33,34	Composition	390K±10% 1/4W
R35,36	Composition	15K±5% 1/2W

● POTENTIOMETER

Symbol No.	Description	Part No.
VR1	5K(B) Separation Control	R10-53

● TRANSISTORS

Symbol No.	Description	
Q1,2	2SC350(R)	Phono E.Q. AF Amp.
Q3,4	2SC350(Y)	Phono E.Q. AF Amp.
Q5	2SC350(G)	Channel R AF Amp.
Q6	2SC350(G)	Channel L AF Amp.

MAIN AMP (8211) SECTION

● CAPACITORS

Symbol No.	Description	
C1	Electrolytic Tubular	10mfd 15WV
C2,3	Electrolytic Tubular	1mfd 25WV
C4	Ceramic	100mmfd±10%
C5	Electrolytic Tubular	50mfd 25WV
C6	Ceramic	250mmfd±10%
C7	Electrolytic Tubular	10mfd 15WV
C8,9	Electrolytic Tubular	1mfd 25WV
C10	Ceramic	100mmfd±10%
C11	Electrolytic Tubular	50mfd 25WV
C12	Ceramic	250mmfd±10%
C13,14	Electrolytic Tubular	100mfd 3WV
C15	Electrolytic Tubular	50mfd 25WV
C16,17	Electrolytic Tubular	50mfd 6WV
C18,19	Ceramic	100mmfd±10%
C20,21	Electrolytic Tubular	50mfd 6WV

● RESISTORS

Symbol No.	Description	
R1	Composition	100K±10% 1/2W
R2	Composition	22K±10% 1/4W
R3	Composition	5.6K±10% 1/2W
R4	Composition	100ohm±10% 1/2W
R5	Composition	180K±10% 1/2W
R8	Composition	4.7K±10% 1/2W
R9	Composition	100ohm±10% 1/2W
R10	Composition	10K±10% 1/2W
R11	Composition	2.2K±10% 1/2W
R12	Composition	330ohm±10% 1/2W
R13	Composition	33ohm±10% 1/2W
R14	Composition	330ohm±10% 1/2W
R15	Composition	100K±10% 1/2W
R16	Composition	22K±10% 1/4W
R17	Composition	5.6K±10% 1/2W
R18	Composition	100ohm±10% 1/2W
R19	Composition	180K±10% 1/2W
R22	Composition	4.7K±10% 1/2W
R23	Composition	100ohm±10% 1/2W
R24	Composition	10K±10% 1/2W
R25	Composition	2.2K±10% 1/2W
R26	Composition	330ohm±10% 1/2W
R27	Composition	33ohm±10% 1/2W
R28	Composition	330ohm±10% 1/2W
R29	Composition	100K±10% 1/2W
R30	Composition	3.3K±10% 1/2W
R31	Composition	1K±10% 1/2W
R32,33	Composition	2.2K±10% 1/2W
R34	Composition	33ohm±10% 1/2W
R35	Composition	10K±10% 1/2W

● POTENTIOMETERS

Symbol No.	Description	Part No.
VR1,2	30K(B) DC Bias	R10-55
VR3,4	10K(B) Protection Level Set	R10-54
VR5,6	500(B) DC Bias	R10-46

www.hifiengine.com

PARTS DESCRIPTION LIST

● TRANSISTORS/DIODES

Symbol No.	Description	
Q1	2SC350(G)	Channel L AF Amp.
Q2	2SC317	Channel L Driver
Q3	2SC538A	Complementary
Q4	2SB89A	Complementary
Q5	2SC538A	Complementary
Q6	2SB89A	Complementary
Q7	2SC317	Channel R Driver
Q8	2SC350(G)	Channel R AF Amp.
Q9	2SC281B	Protection
D1,2	1N60	Rect.
D4,5	LV-2	Stabilizer
TH1,2	SDT-35	Thermistor

MAIN CHASSIS (AA63) SECTION

● CAPACITORS

Symbol No.	Description	
C3,4	Ceramic	1000mmfd±20%
C5,6	Mylar	0.1mfd±20%
C7	Mylar	0.22mfd±20%
C8,9	Mylar	0.022mfd±20%
C10	Mylar	0.22mfd±20%
C11	Mylar	0.033mfd±20%
C12,13	Mylar	0.0033mfd±20%
C14	Mylar	0.033mfd±20%
C15,16	Ceramic	750mmfd±20%
C17,18	Electrolytic Tubular	1000mfd 30WV
C19,20	Mylar	0.22mfd±20%
C21	Electrolytic Tubular	200mfd 25WV
C22	Electrolytic Tubular	1000mfd 30WV
C23	Electrolytic Tubular	1000mfd 50WV
C24	Electrolytic Tubular	200mfd 15WV
C25	Electrolytic Tubular	100mfd 15WV
C26	Electrolytic Tubular	500mfd 25WV
C27,28	Paper Tubular	0.02mfd±20%
C29	Paper Tubular	0.01mfd±20%
C30	Electrolytic Tubular	1000mfd 15WV
C31,32	Mylar	0.0047mfd±20%

● RESISTORS

Symbol No.	Description	
R3,4	Composition	33K±10% 1/2W
R5,6	Composition	3.3K±10% 1/2W
R7,8	Composition	5.6K±10% 1/2W
R9,10	Composition	150K±10% 1/2W
R11,12	Composition	1.5K±10% 1/2W
R13,14	Composition	6.8K±10% 1/2W
R15,16	Wire Wound	0.47ohm±10% 1W
R17,18	Wire Wound	4.7ohm±5% 4W
R19,20	Wire Wound	0.47ohm±10% 1W
R21,22	Composition	4.7ohm±10% 1/2W
R23,24	Composition	330ohm±10% 1/2W
R25,26	Composition	1K±10% 1/2W
R27	Composition	56ohm±10% 1/2W
R28	Composition	100ohm±10% 1/2W
R29	Composition	2.7K±10% 1/2W
R30	Wire Wound	1K±5% 2W
R31	Composition	1.5K±10% 1/2W
R32	Wire Wound	220ohm±5% 6W
R33	Wire Wound	430ohm±5% 4W
R34	Composition	150ohm±10% 1/2W
R35	Composition	3.3K±10% 1/2W

● POTENTIOMETERS

Symbol No.	Description		Part No.
VR1	50K(T2-26)	VOLUME	R04-2208
VR2	50K(A)	BASS	R02-0138
VR3	50K(A)	TREBLE	R02-0138

● SWITCHES

Symbol No.	Description	Part No.
S1	SELECTOR Rotary Y-4·13·4	S03-619
S2	TAPE MONITOR See Saw	S10-22N
S3	MODE See Saw	S10-22N
S4	LOUDNESS See Saw	S10-22N
S5	OUTPUT Rotary Y-1·2·3	S03-257
S6	HIGH FILTER See Saw	S10-22N

● TRANSISTORS/DIODES

Symbol No.	Description	
Q1	2SC669	Rect.

www.hifiengine.com

PARTS DESCRIPTION LIST

Symbol No.	Description	
Q2~5	2SD92	Power Amp.
D1	1S338	Rect.
D2,3	DS1M	Rect.
D4	SW-05S	Rect.

● MISCELLANEOUS

Symbol No.	Description	Part No.
-	Case	A01-AA63
-	Chassis	A03-AA63
-	Dial Scale	A07-AA63
V.C	Variable Capacitor FM 3 Gang, AM 2 Gang	D01-116
-	Dial Pointer	D12-55
J	US Jack	E16-13
-	Bar Antenna	L15-27

Symbol No.	Description	Part No.
-	Knob VOLUME Dual Front	S14-259
-	Knob TUNING	S14-330
-	Knob VOLUME Dual Back	S14-807
-	Knob BASS, TREBLE SELECTOR, OUTPUT	S14-808
-	Fuse Holder	S15-03B
-	Fuse Holder x 2	S15-09
P.L	Pilot Lamp x 2	S16-06
P.L	Pilot Lamp	S16-12
P.L	Pilot Lamp	S16-19
F	Fuse 1A	S17-01
P.T	Transformer POWER	T01-183A
M	Meter TUNING	T11-57

www.hifiengine.com

CHASSIS TOP VIEW

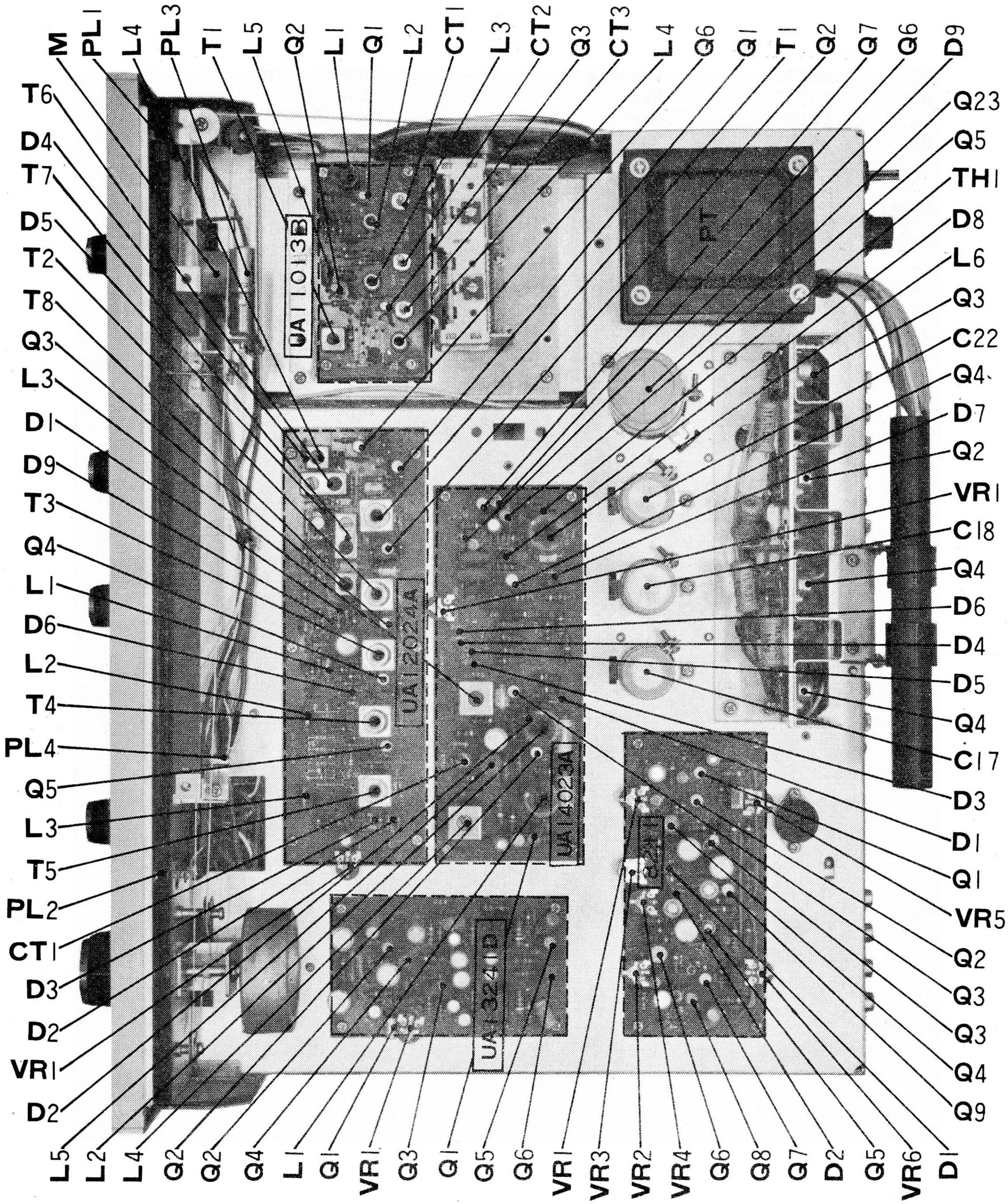

CHASSIS BOTTOM VIEW

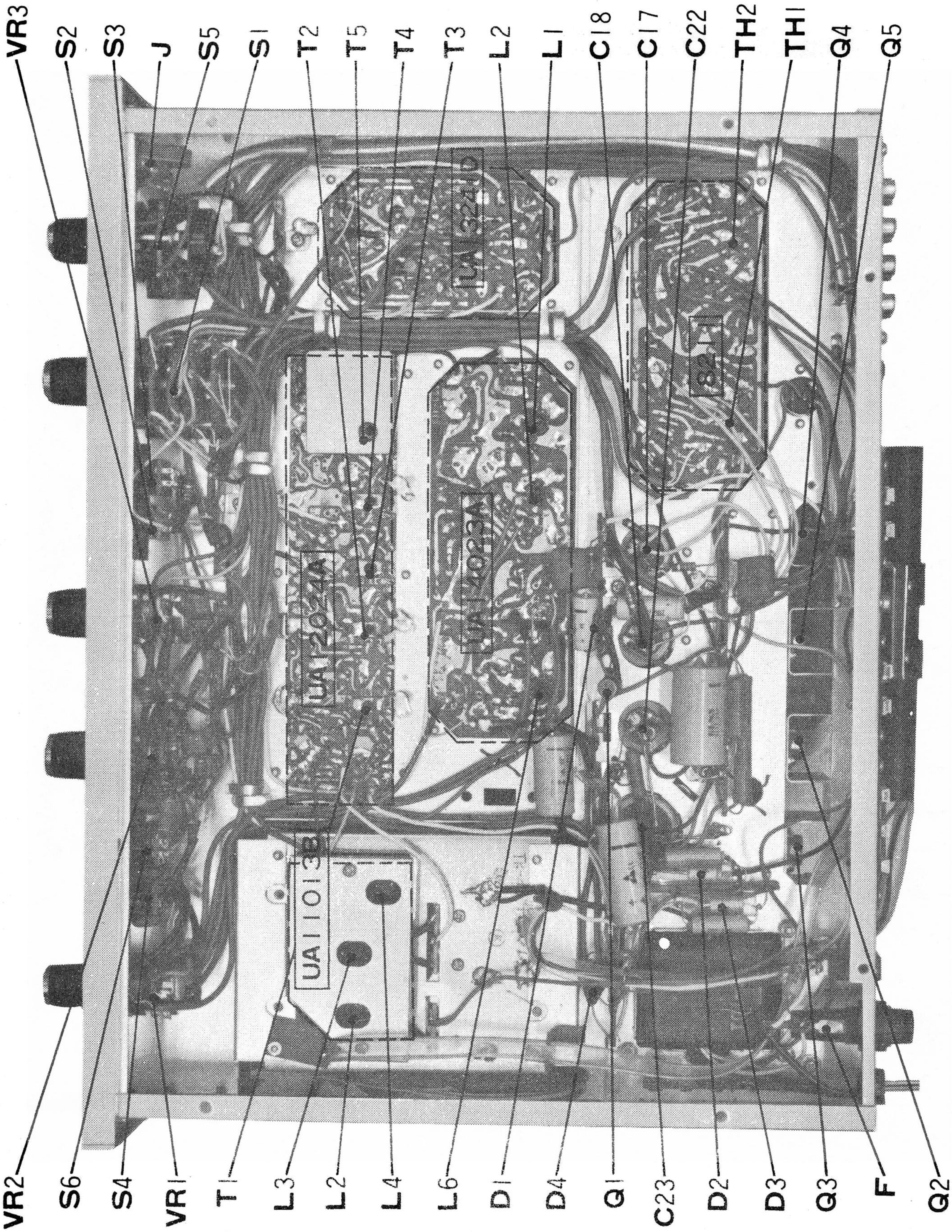

SEALED CIRCUIT ASSEMBLIES - PHONTOM VIEWS

RF (UA11013B) Section

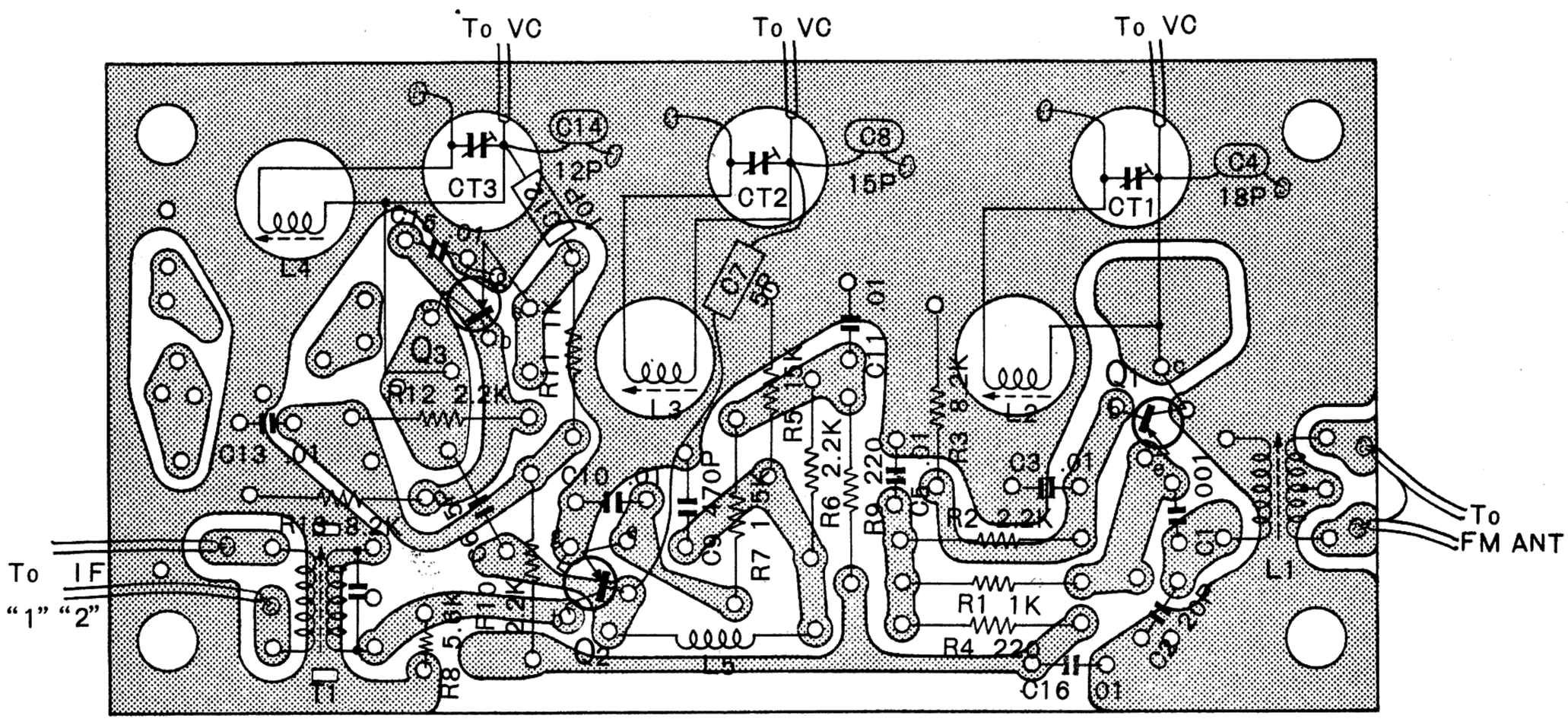

$Q_{1,3}$ 2SA240 Q_2 2SA239

www.hifiengine.com

SEALED CIRCUIT ASSEMBLIES-PHONTOM VIEWS

IF (UA12024A) Section

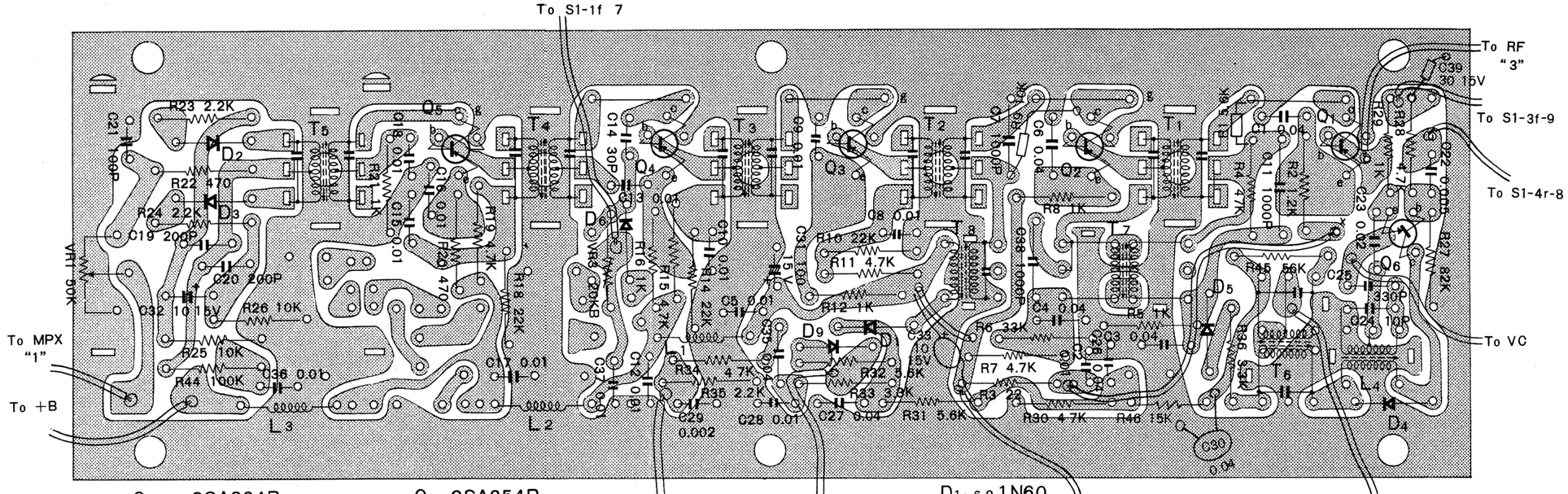

$Q_{1\sim5}$ 2SA234B Q_6 2SA354B $D_{1\sim6,9}$ 1N60

MPX (UA14023A) Section

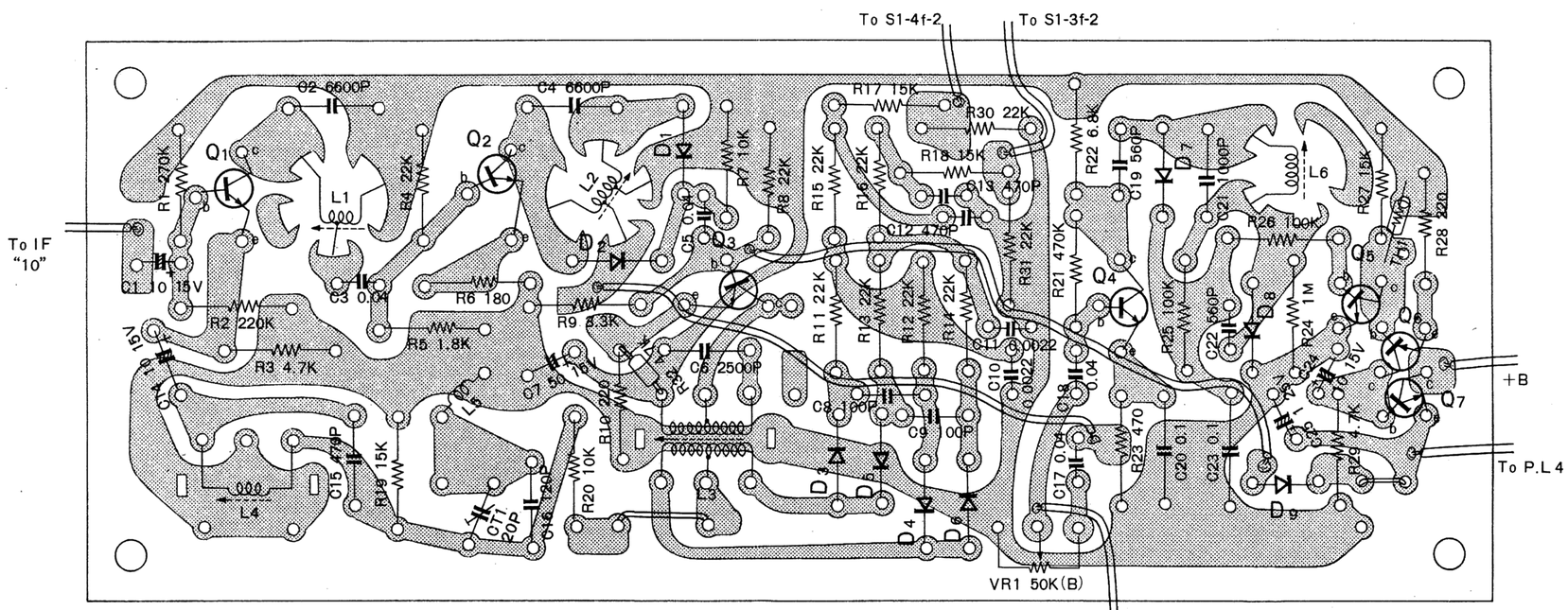

$Q_{1\sim5}$, Q_7 2SC281B Q_6 2SB54 $D_{1\sim9}$ 1N60 TH_1 SDT-1000

SEALED CIRCUIT ASSEMBLIES-PHONTOM VIEWS

PRE AMP (UA1324ID) Section

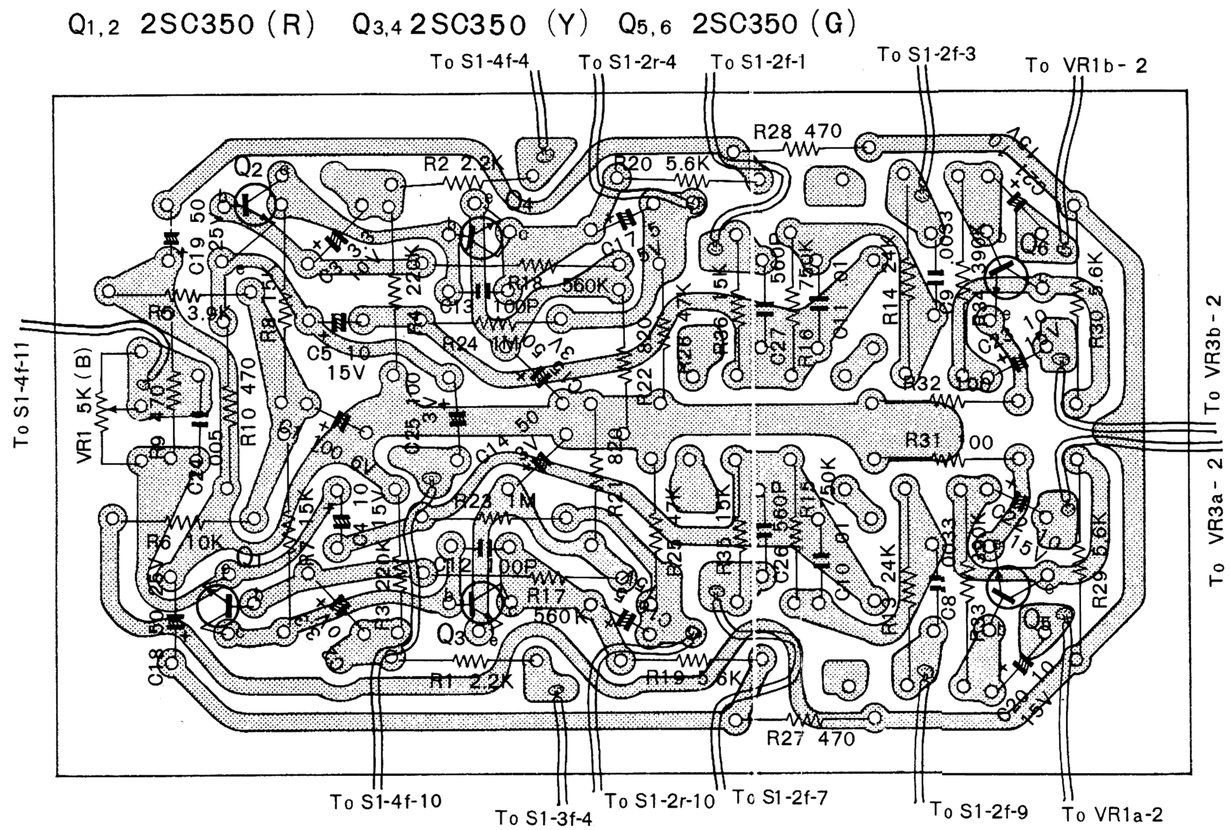

MAIN AMP (8211) Section

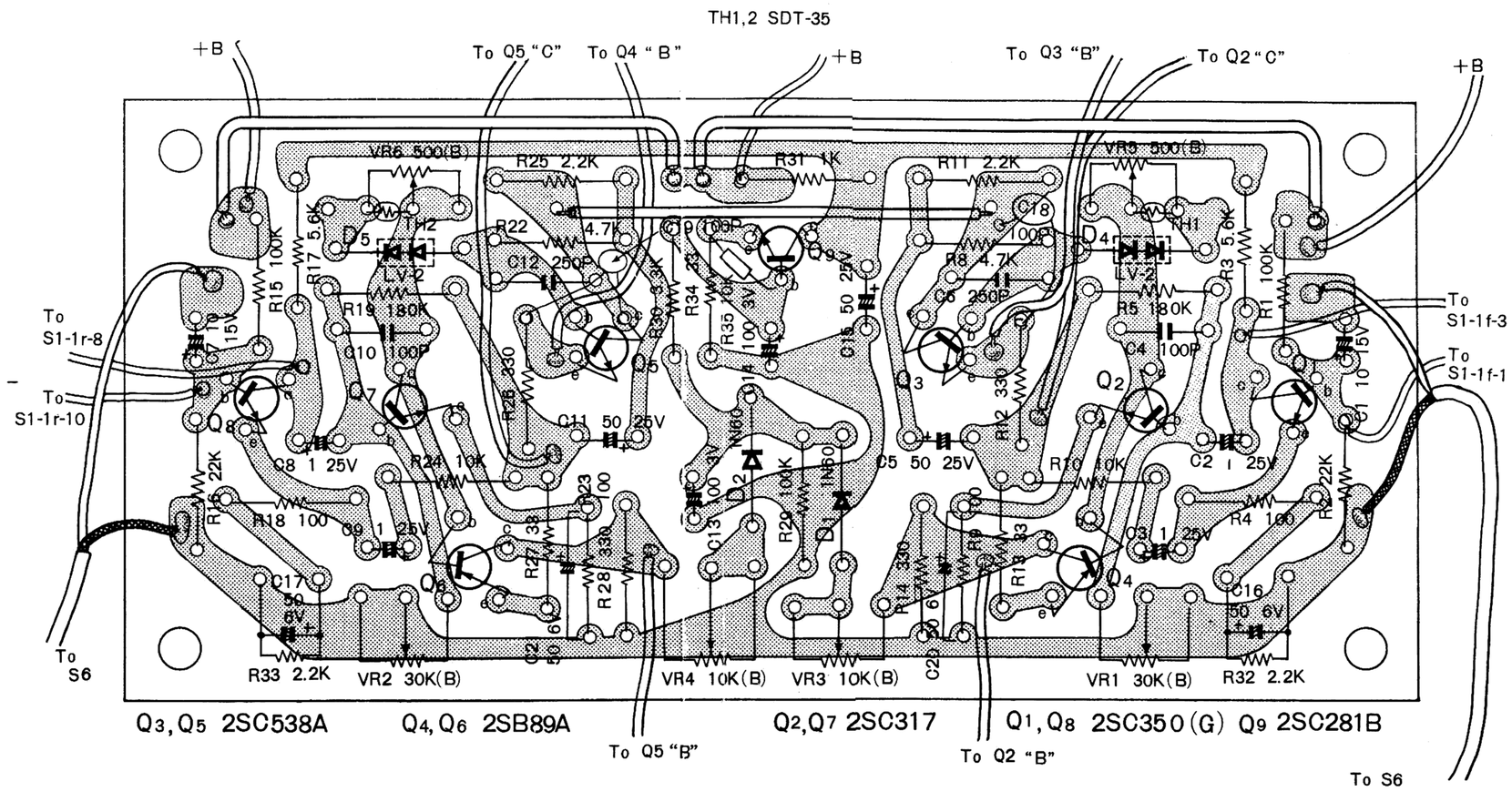

SCHEMATIC DIAGRAM

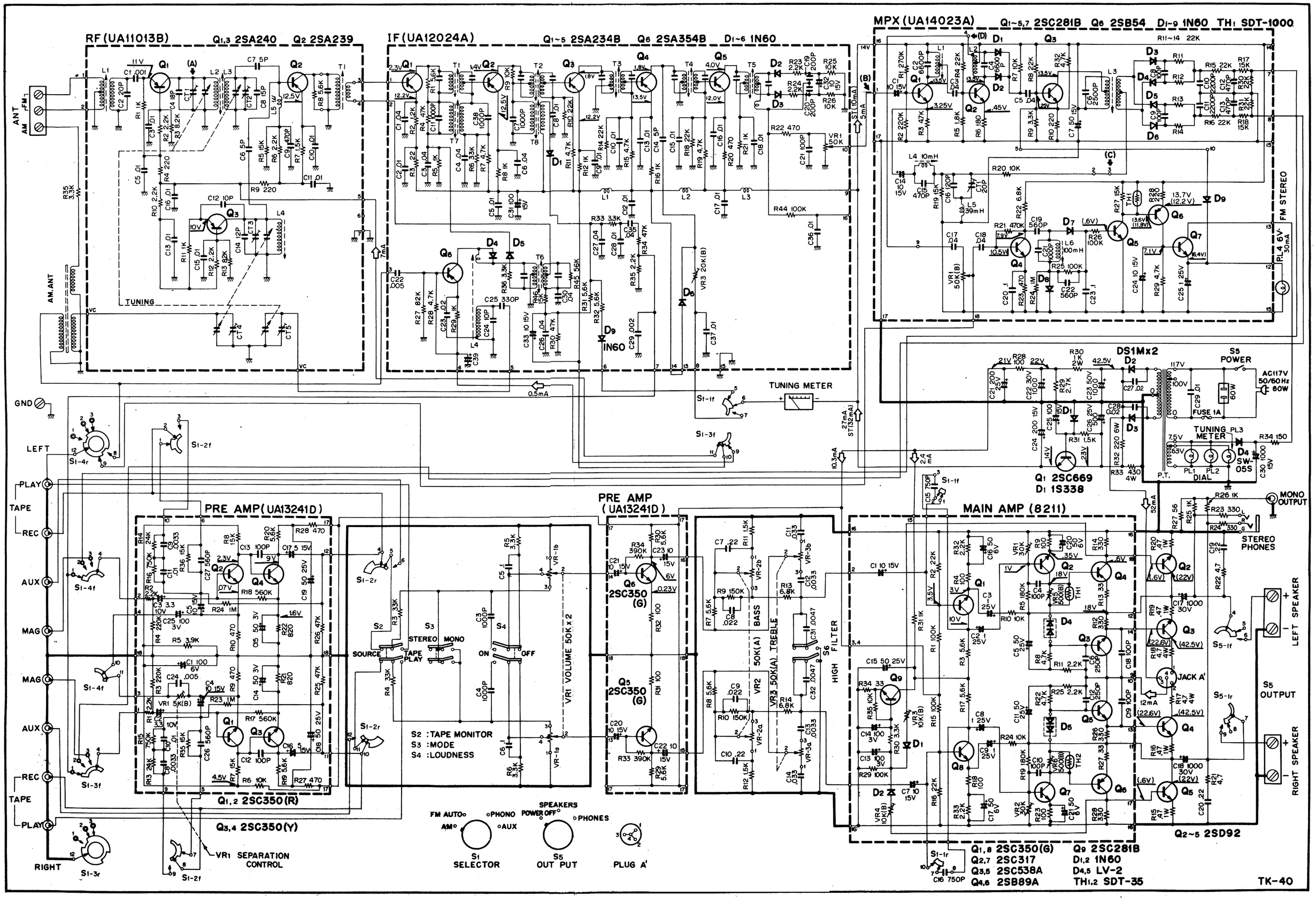

BLOCK DIAGRAM

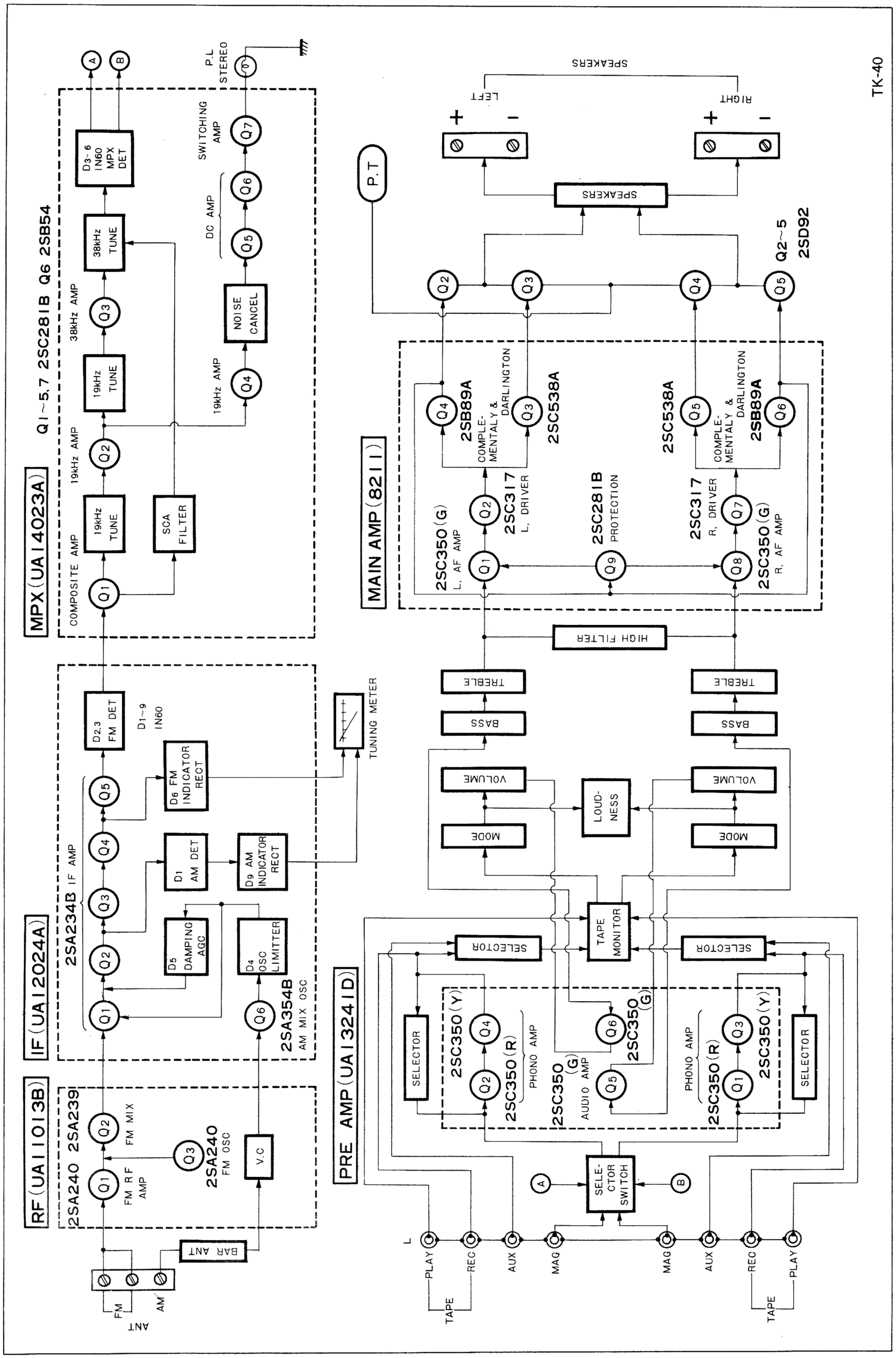

REMOVALS DISASSEMBLE

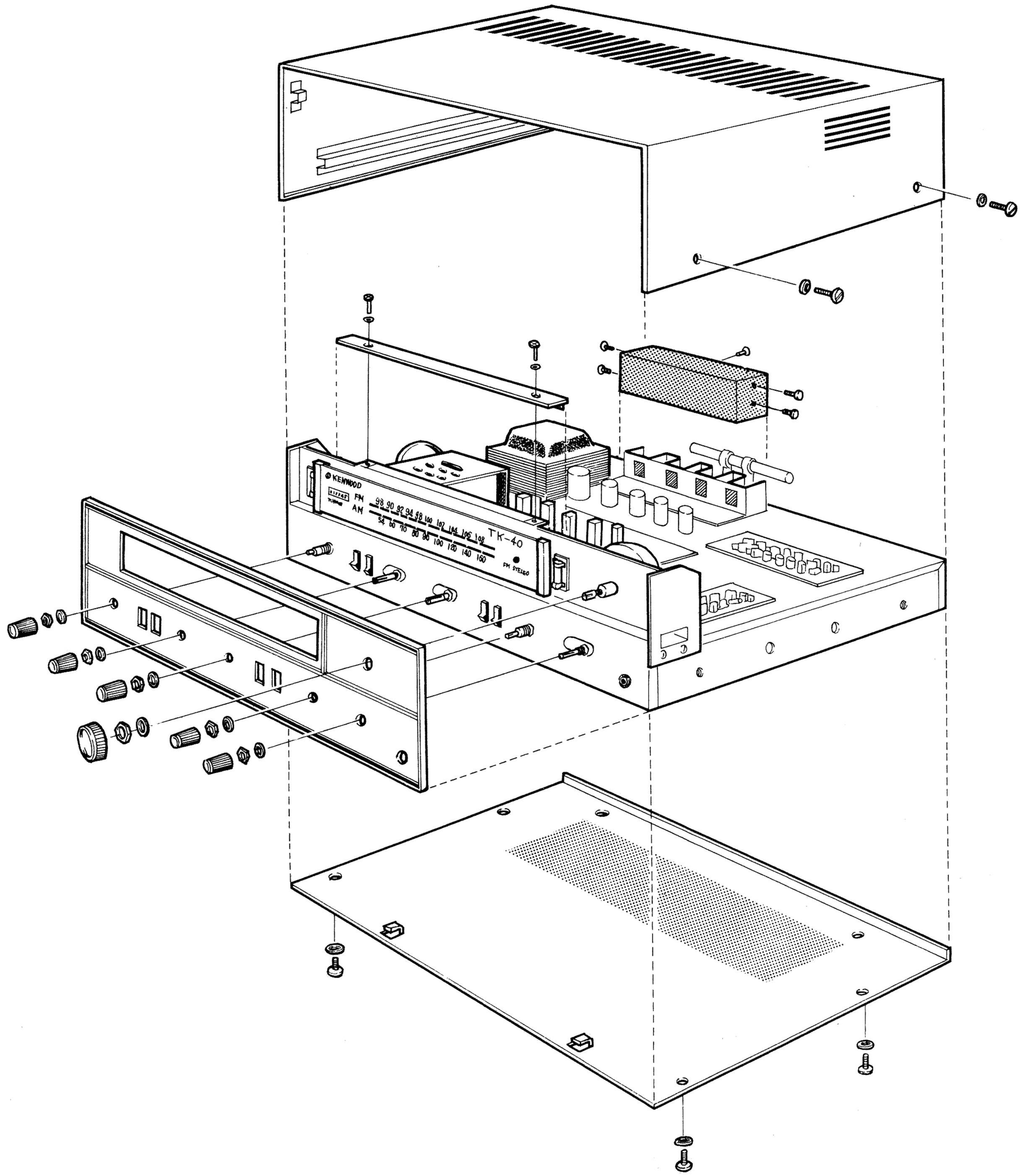

www.hifiengine.com

ALIGNMENT PROCEDURE

Please read the following notes carefully before making any alignment adjustment.

1. Generator signal : Always work with the minimum generator signal sufficient to produce a satisfactory output indication.
2. Alignment tools : IF transformers require a plastic screwdriver-type alignment tool.
3. Dial pointer : Check pointer for alignment at left hand start mark.

1. FM Section "UA11013B""UA12024A"

Instruments : FM signal generator, AC VTVM & Oscilloscope.

STEP	Dummy Antenna	Signal Generator Coupling	Signal Generator Frequency	Selector Switch	Tuning Dial Setting	Indicating Meter	Adjust	Remarks
1	Direct	High side to (A) Low side to chassis	10.7 MHz (Unmod.)	FM	Any non-interfering Setting	Tuning Indicator	"UA11013B" T1 "UA12024A" T1 ~ 4 Top & Bottom	Maximum Deflection
2	300 ohm Carbon Resistor	Antenna terminal	98 MHz 400Hz±75kHz FM 500 ~ 1000μV	FM	Tune for maximum,using tuning indicator	VTVM at LEFT output jack of TAPE REC	"UA12024A" T5 Top & Bottom	Maximum Deflection
3	300 ohm Carbon Resistor	Antenna terminal	90 MHz 400 Hz ±75kHz FM	FM	90MHz	VTVM & Xtal earphone at LEFT output jack of TAPE REC	"UA11013B" L1 ~ 4	Maximum Deflection
4	300 ohm Carbon Resistor	Antenna terminal	106 MHz 400 Hz ±75kHz FM	FM	106MHz	VTVM & Xtal earphone at LEFT output jack of TAPE REC	"UA11013B" CT1 ~ 3	Maximum Deflection
5	Repeat steps 3 & 4 until no further improvement is possible.							
6	300 ohm Carbon Resistor	Antenna terminal	98 MHz 400Hz±75kHz FM 1000μV	FM	Tune for maximum,using tuning indicator	VTVM & Xtal earphone at LEFT output jack of TAPE REC	"UA12024A" VR1	Set the output level to 2V

Confirm the presence of 400 Hz signal with crystal earphone.

www.hifiengine.com

ALIGNMENT PROCEDURE

2. AM Alignment, "UA11013B" "UA12024A"

Instruments : AM signal generator, AC VTVM & Oscilloscope.

STEP	Dummy Antenna	Signal Generator Coupling	Signal Generator Frequency	Selector Switch	Tuning Dial Setting	Indicating Meter	Adjust	Remarks
1	Direct	High side to AM antenna terminal Low side to chassis	455kHz (400 Hz 30% AM)	AM	Any non-interfering setting	Tuning indicator	"UA12024A" T6～8	Maximum Deflection
2		Connect to short loop of wire, Radiate signal into ferrite loop stick antenna of receiver	600kHz (400 Hz 30% AM)	AM	600kHz	Tuning indicator	"UA11013B" L4 & Bar Antenna ring	Maximum Deflection
3		Connect to short loop of wire, Radiate signal into ferrite loop stick antenna of receiver	1400kHz (400 Hz 30% AM)	AM	1400kHz	Tuning indicator	"UA11013B" CT 4, 5	Maximum Deflection
4	Repeat steps 2 & 3 until no further improvement is possible.							

3. MPX Section "UA14023A"

(a) SCA Filter

Instruments : Audio signal generator & AC VTVM.
Selector switch: "FM" position.

STEP	Audio Signal Generator Coupling	Audio Signal Generator Frequency	VTVM & Oscilloscope Coupling	Adjust	Remarks
1	High side to (B) Low side to chassis	72kHz (0.5V)	High side to (C) Low side to chassis	"UA14023A" L4	Minimum Deflection
2	High side to (B) Low side to chassis	67kHz (0.5V)	High side to (C) Low side to chassis	"UA14023A" CT1	Minimum Deflection

Refer to MPX block "UA14023A" in fig. for test point.

www.hifiengine.com

ALIGNMENT PROCEDURE

(b) MPX

Instruments : FM Stereo generator, Audio signal generator, AC VTVM & Oscilloscope.

STEP	FM Stereo Generator				Selector Switch	VTVM & Oscilloscope Connection	Adjust	Remarks
	Coupling	Modulation Frequency	Input Selector	19kHz Pilot Carrier Switch				
1	Antenna terminal	OFF	OFF	ON	FM STEREO	High side to (D) Low side to chassis	"UA14023A" L1, L2	Maximum deflection
2	Antenna terminal	400 Hz	A-B or REVERSE	OFF	FM STEREO	LEFT or RIGHT output jack of TAPE REC	"UA14023A" L3	To obtain a stable wave form at 400 Hz on oscilloscope
3	Antenna terminal	400 Hz	A-B or REVERSE	ON	FM STEREO	LEFT or RIGHT output jack of TAPE REC	"UA14023A" L2	To obtain a wave form with maximum amplitude and minimum distortion at 400 Hz on oscil-loscope
4	Antenna terminal	2000 Hz	A or LEFT	ON	FM STEREO	RIGHT output	"UA13241D" VR1	Minimum deflection
5	Antenna terminal	2000 Hz	B or RIGHT	ON	FM STEREO	LEFT output	"UA13241D" VR1	Minimum deflection
6	Repeat steps 4 & 5 until no further improvement is possible.							

www.hifiengine.com

PROCEDURE FOR REPLACING OUTPUT TRANSISTOR

Symptoms:

A. Load hum in the speaker.

B. Power transistors, 2SD92 heat up.

C. 0.47 ohm resistor R15, R16, R19 and R20, 4.7 ohm resistor R17 and R18 heat up.

Replacing Method:

Replace all the four transistors, 2SD92 (Sanken) or 2N-1486(RCA).

Adjusting Procedures:

Connect dummy load to 16 ohm output terminals, and connect to the oscilloscope input in parallel.

Set audio generator at 100mV 1000Hz and connect to the AUX terminals.

Advance the front panel volume control until the sine-wave just begins to clip on the oscilloscope.

Adjust balance control VR1(left) or VR2 (right) on the print board "8211" until clipping is symmetrical.

Testing Procedures:

Until replacement is completed, do not operate the set the unit without first testing.

Perform the test according to the following procedures.

1. Using variable transformer, lower the AC line voltage to approximately 30 volts.

3. Also measure the voltage between the chassis and "C" of the power transistor Q5 or Q2. If a tester indicates approximately 22V, it is normal.

2. Using a tester, measure the voltage between the chassis and "C" of the power transistor Q4 or Q3. If a tester indicates approximately 42.5V, it is normal.

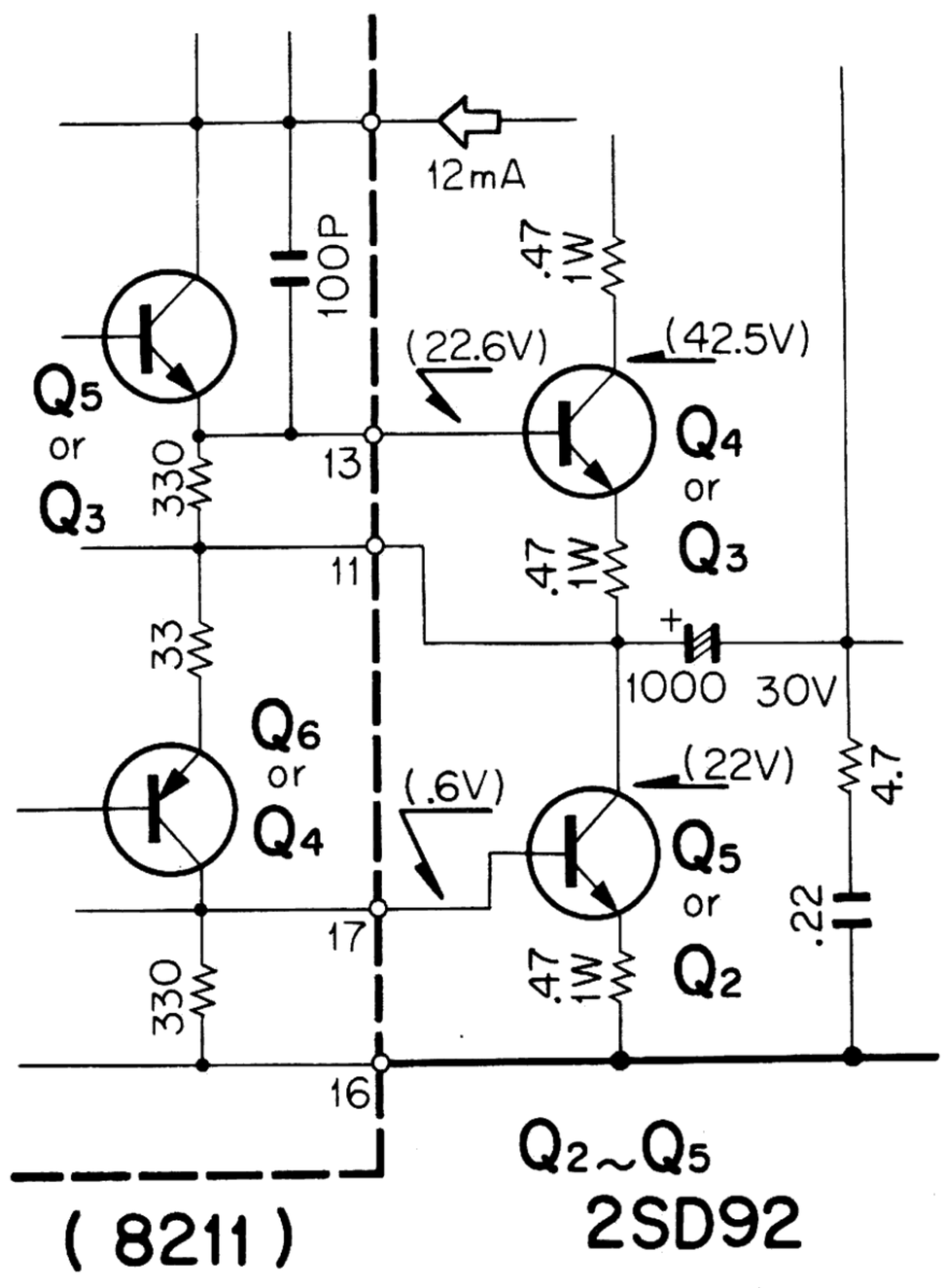

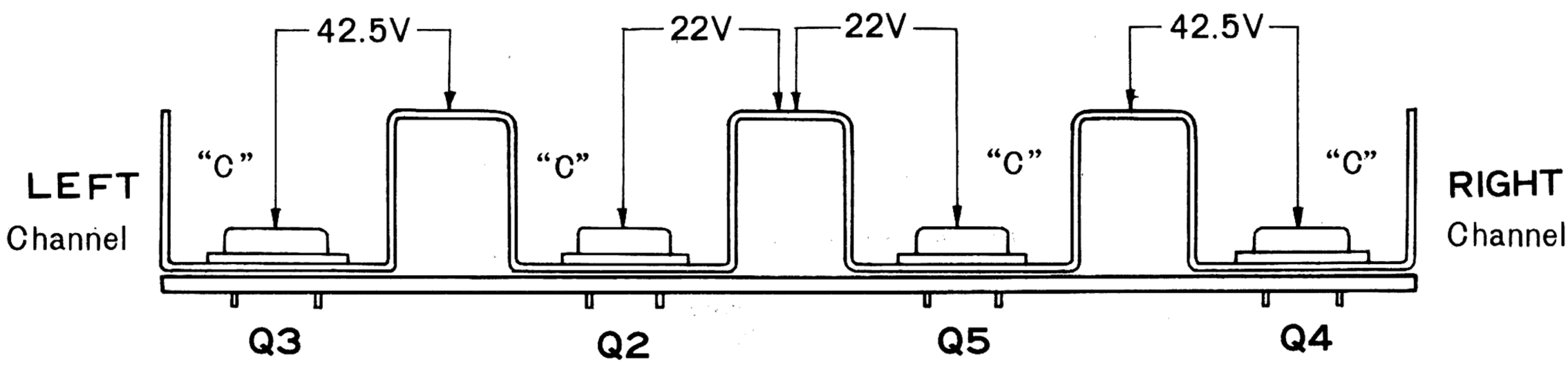

DIAL CORD STRINGING

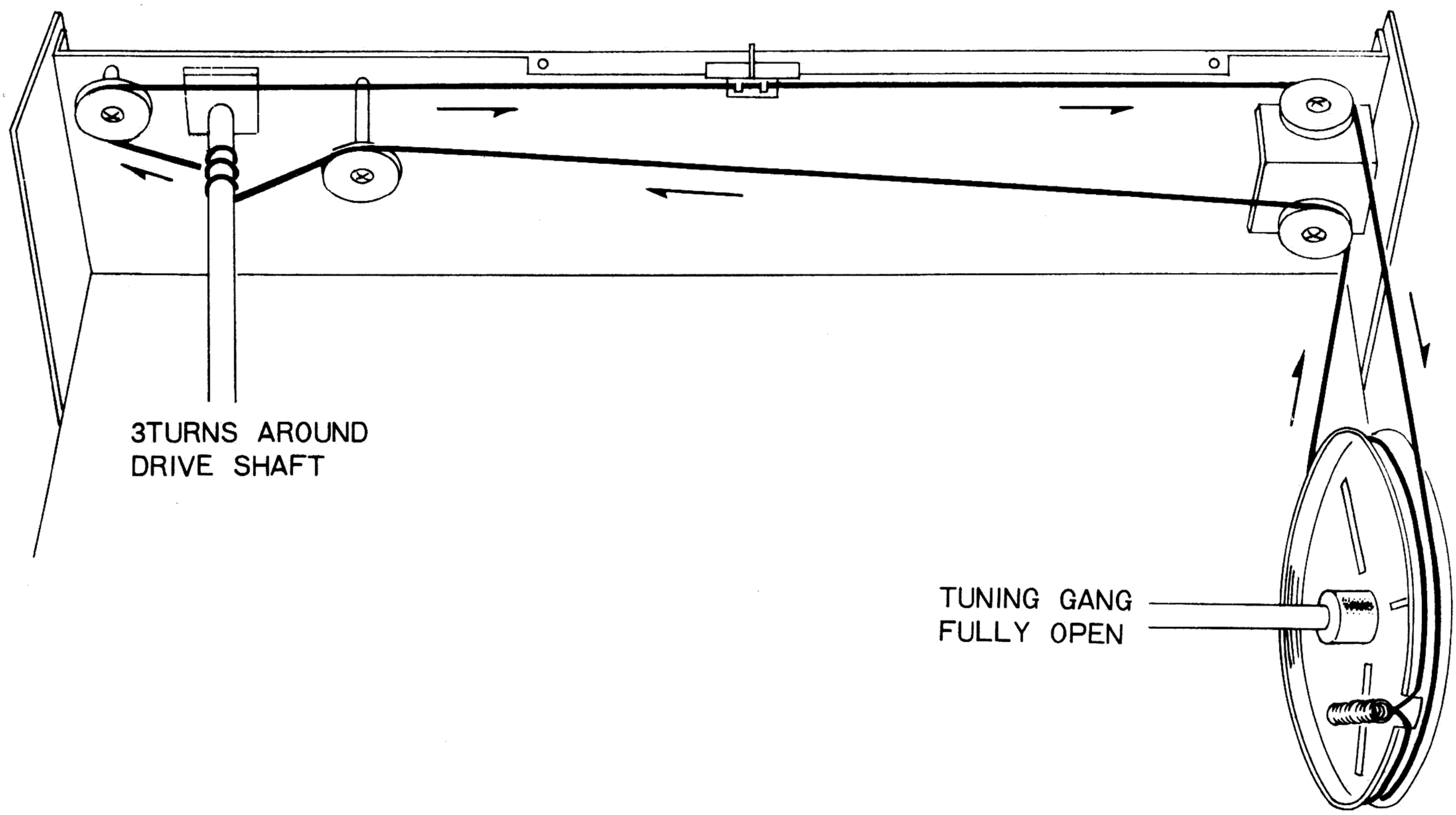

www.hifiengine.com

KENWOOD ELECTRONICS, INC.

69-41 CALAMUS AVENUE
WOODSIDE NEW YORK, N.Y.

3700 SOUTH BROADWAY PLACE
LOS ANGELES, CALIFORNIA90007

©1967·1 PRINTED IN JAPAN

www.hifiengine.com