# KENWOOD

## ALL TRANSISTOR FM AUTOMATIC STEREO RECEIVER

# TK-50

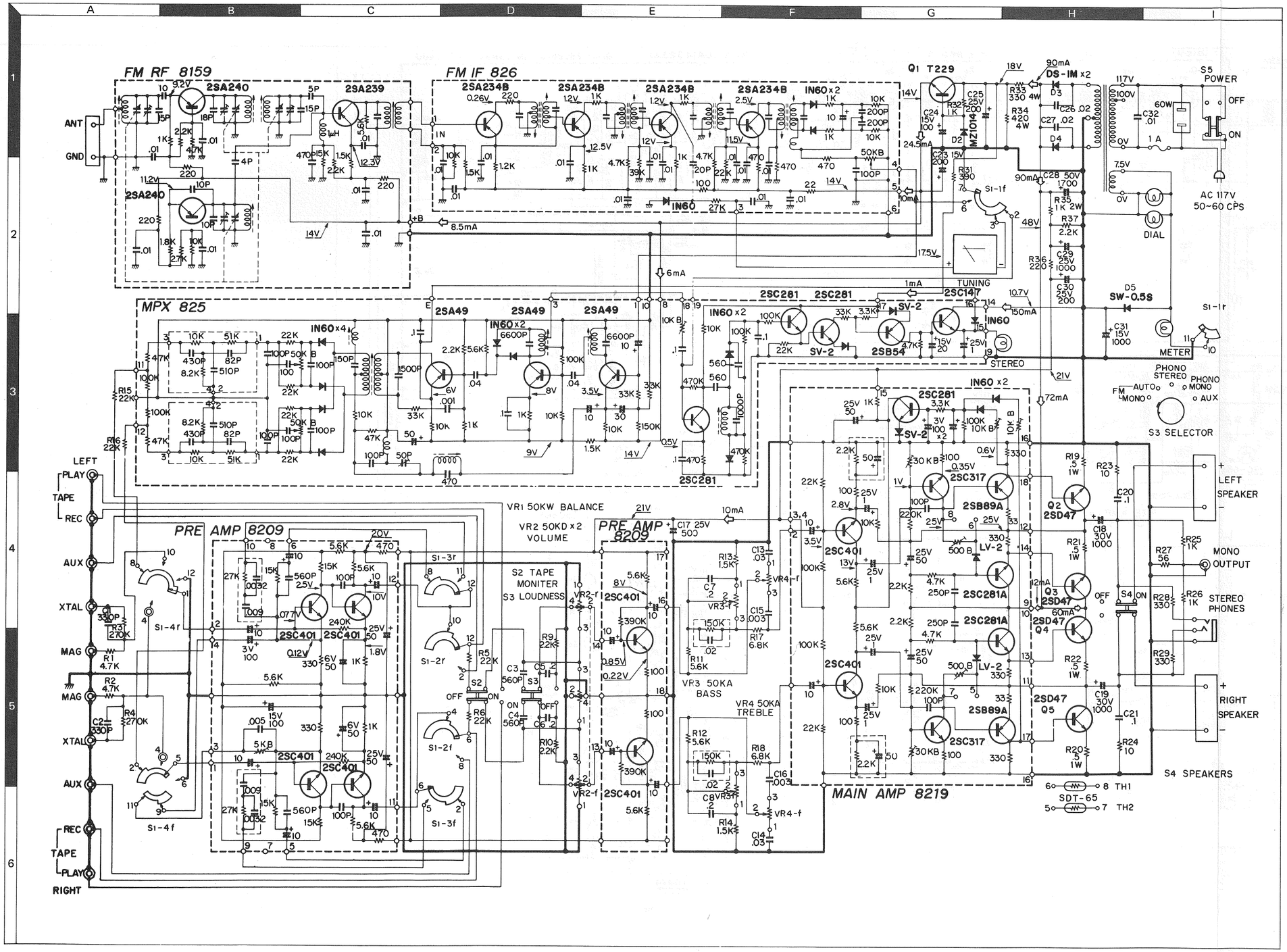

## SPECIFICATIONS

| | |
|---|---|
| TRANSISTORS AND DIODES: | 35 transistors and 23 diodes |
| **AMPLIFIER SECTION** | |
| TOTAL MUSIC POWER: | 50 watts (IHF Standard at 8 ohms) |
| RMS POWER: | 20 watts per channel (0.9% THD) |
| IM DISTORTION: | Less than 1% up to 18 watts per channel |
| FREQUENCY RESPONSE: | 20 cps — 50,000 cps ±1 db |
| POWER BANDWIDTH: | 30 cps — 25,000 cps ±1 db (1% THD) |
| SIGNAL to NOISE RATIO: | Phono −60 db, AUX −70 db below rated output. |
| INPUT SENSITIVITY: | Phono 2 mV, AUX 150 mV |
| SPEAKER IMPEDANCE: | 4 — 16 ohms. |
| BASS CONTROL: | ±10 db, (50 cps) |
| TREBLE CONTROL: | ±10 db, (10,000 cps) |
| **TUNER SECTION** | |
| USABLE SENSITIVITY: | FM: 2.5 microvolts (IHF Standard) |
| SIGNAL to NOISE RATIO: | 63 db. |
| IMAGE REJECTION: | 60 db (at 98 Mc) |
| SPRIOUS REJECTION: | 90 db (at 98 Mc) |
| CAPTURE RATIO: | 2.5 db |
| STEREO SEPARATION: | 35 db (400 cps) |
| FREQUENCY DRIFT: | 0.025% |
| FM AUTOMATIC SWITCHING: | Yes |
| POWER CONSUMPTION: | 50 — 60 cps 117V 90 watts. |
| DIMENSION: | Width 16-1/2", Height 5-13/16", Depth 14". |
| NET WEIGHT: | 22 lbs. |

TK-50 TK-50

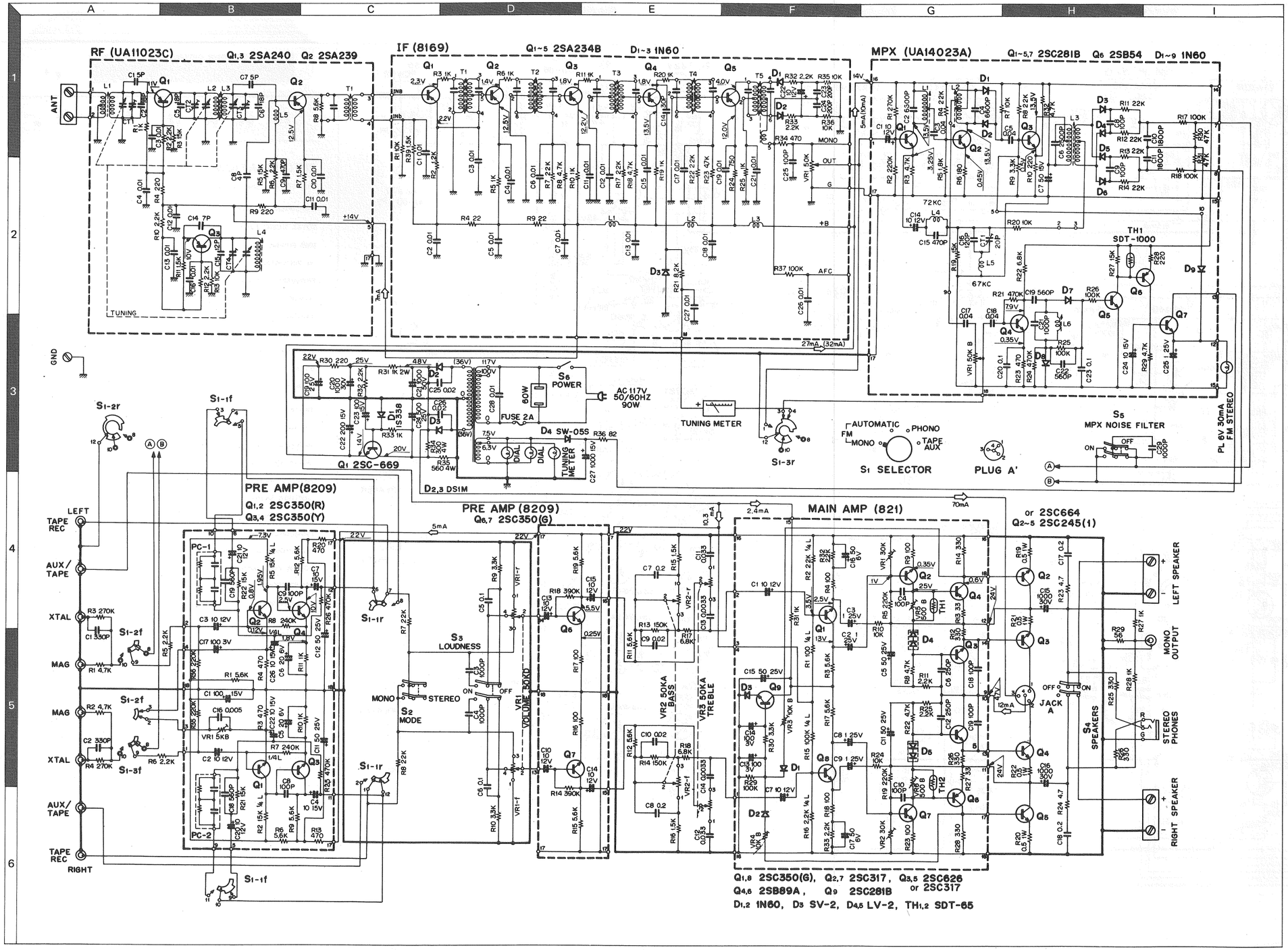



35 35
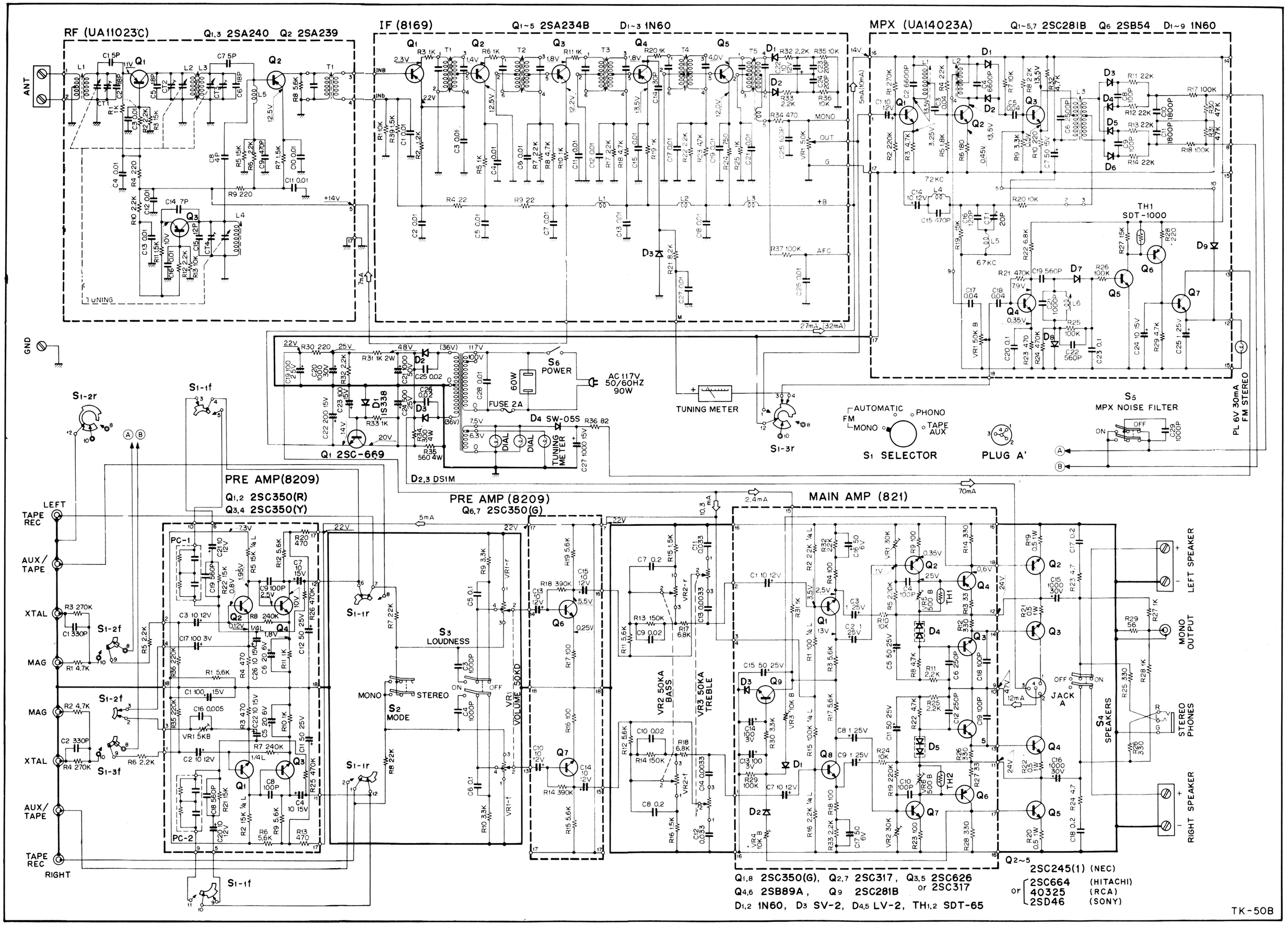
# SCHEMATIC DIAGRAM