KENWOOD

HI/FI STEREO COMPONENTS

SERVICE MANUAL

. . . the sound

approach

to quality

MODEL TK-55

SOLID STATE FM STEREO RECEIVER

www.hifiengine.com

PARTS DESCRIPTION LIST

RF (UA11143C) SECTION

● CAPACITORS

Symbol No.	Description	Part No.
C1	Ceramic	3mmfd±0.25mmfd
C2	Ceramic	0.0012mfd+20%
C3	Ceramic	12mmfd+10%
C4	Ceramic	0.04mfd+100%,-0%
C5	Ceramic	0.01mfd+80%,-20%
C6	Ceramic	5mmfd+0.5mmfd
C7	Ceramic	0.01mfd+80%,-20%
C8,	Ceramic	12mmfd+10%
C10	Ceramic	5mmfd+0.5mmfd
C11	Ceramic	470mmfd+20%
C12	Ceramic	0.01mfd+80%,-20%
C13	Ceramic	20mmfd+10%
C14	Ceramic	0.01mfd+80%,-20%
C15	Ceramic	2mmfd+0.25mmfd
C16	Ceramic	0.01mfd+80%,-20%
C17	Ceramic	7mmfd+0.5mmfd
C18	Ceramic	0.01mfd+80%,-20%
C19	Ceramic	15mmfd+10%
C23	Ceramic	0.01mfd+80%,-20%
CT1~4	Ceramic	TRIMMER 1.7mmfd~10mmfd C4036
VC	Variable	Capacitor D01-147

● RESISTORS

Symbol No.	Description		
R1	Composition	100Kohm+10%	1/4W
R2	Composition	47ohm+10%	1/4W
R3	Composition	470ohm+10%	1/4W
R4	Composition	15Kohm±10%	1/4W
R5	Composition	2.2Kohm±10%	1/4W
R6	Composition	1.5Kohm±10%	1/4W
R7	Composition	100Kohm±10%	1/4W
R8	Composition	5.6Kohm±10%	1/4W
R9	Composition	2.2Kohm±10%	1/4W
R10	Composition	1Kohm+10%	1/4W
R11	Composition	5.6Kohm+10%	1/4W
R12	Composition	2.2Kohm±10%	1/4W

● COILS/TRANSFORMER

Symbol No.	Description	Part No.
L1	FM ANT Coil	L24-UA11143A
L2	FM RF Coil	L24-UA11143RA
L3	FM RF Coil	L24-UA11143RB
L4	FM OSC Coil	L24-UA11173S
L5,6	Choke Coil	L20-010C
T1	FM IFT 10.7MHz	L52-10

● TRANSISTORS/DIODE

Symbol No.	Description	
Q1	3SK-22(FET)	FM RF Amp.
Q2	2SA239	FM MIXER
Q3	2SA240 (2)	FM OSC
D1	1N60	AGC

IF (8167) SECTION

● CAPACITORS

Symbol No.	Description	
C1~7	Ceramic	0.01mfd+100%,-0%
C11~13	Ceramic	0.01mfd+100%,-0%
C15	Ceramic	0.01mfd+100%,-0%
C17~19	Ceramic	0.01mfd+100%,-0%
C21	Ceramic	0.01mfd+100%,-0%
C22	Electrolytic Tubular	10mfd 12WV
C23,24	Ceramic	200mmfd+10%
C25	Ceramic	100mmfd±10%

www.hifiengine.com

PARTS DESCRIPTION LIST

● RESISTORS

Symbol No.	Description		
R1	Composition	10Kohm±10%	1/4W
R2	Composition	1.2Kohm±10%	1/4W
R3	Composition	1.5Kohm±10%	1/4W
R4	Composition	22ohm±10%	1/4W
R5	Composition	1Kohm±10%	1/4W
R6	Composition	10Kohm±10%	1/4W
R7	Composition	22Kohm±10%	1/4W
R8	Composition	4.7Kohm±10%	1/4W
R9	Composition	22ohm±10%	1/4W
R10	Composition	1Kohm±10%	1/4W
R17	Composition	22Kohm±10%	1/4W
R18	Composition	4.7Kohm±10%	1/4W
R19	Composition	1Kohm±10%	1/4W
R22	Composition	22Kohm±10%	1/4W
R23	Composition	4.7Kohm±10%	1/4W
R24	Composition	750ohm±10%	1/4W
R25	Composition	1Kohm±10%	1/4W
R32,33	Composition	2.2Kohm±10%	1/4W
R34	Composition	470ohm±10%	1/4W
R35,36	Composition	10Kohm±10%	1/4W
R39	Composition	1.5Kohm±10%	1/4W

● POTENTIOMETER

Symbol No.	Description		Part No.
VR1	50Kohm(B)	Level Set	R10-56

● COILS/TRANSFORMERS

Symbol No.	Description		Part No.
L1~3	Choke Coil		L20-010
T1	FM IFT	10.7MHz	L02-60
T2	FM IFT	10.7MHz	L02-61
T3	FM IFT	10.7MHz	L02-79
T4	FM IFT	10.7MHz	L02-80
T5	FM IFT	10.7MHz	L02-64

● TRANSISTORS/DIODES

Symbol No.	Description	
Q1~5	2SA234B	FM IF Amp.
D1,2	1N60	FM Det.

IF(UA12123)SECTION

● CAPACITORS

Symbol No.	Description	
C1	Ceramic	560mmfd±20%
C2~5	Ceramic	0.01mfd+80%,-20%
C6	Ceramic	0.04mfd+80%,-20%
C7	Ceramic	0.01mfd+80%,-20%
C8	Ceramic	1mmfd±0.25mmfd

● RESISTORS

Symbol No.	Description		
R1	Composition	10Kohm±10%	1/4W
R2	Composition	39Kohm±10%	1/4W
R3	Composition	470ohm±10%	1/4W
R4	Composition	220ohm±10%	1/4W
R5	Composition	1Kohm±10%	1/4W
R6	Composition	10Kohm±10%	1/4W
R7	Composition	100Kohm±10%	1/4W

● POTENTIOMETERS

Symbol No.	Description		Part No.
VR1	100Kohm(B)	Beacon Setting	R10-91
VR2	20Kohm(B)	Indicator Adj.	R10-75
VR3	10Kohm(B)	Squelch	R10-63

www.hifiengine.com

PARTS DESCRIPTION LIST

● TRANSFORMER

Symbol No.	Description		
T1	FM	IFT	

● TRANSISTOR/DIODES

Symbol No.	Description		
Q1	2SC460B	10.7MHz	FM IF Amp.
D1,2	1N60	Det.	

MPX(UA14023C)SECTION

● CAPACITORS

Symbol No.	Description	
C1	Electrolytic Tubular	10mfd 16WV
C2	Polystiyrole	6600mmfd±5%
C3	Ceramic	0.04mfd±20%
C4	Polystiyrole	6600mmfd±5%
C5	Ceramic	0.04mfd±20%
C6	Polystiyrole	2500mmfd±5%
C7	Electrolytic Tubular	47mfd 16WV
C8,9	Ceramic	100mmfd±10%
C10,11	Ceramic	2200mmfd±10%
C12,13	Ceramic	470mmfd±10%
C14	Electrolytic Tubular	10mfd 16WV
C15	Polystiyrole	470mmfd±5%
C16	Polystiyrole	120mmfd±5%
C17,18	Ceramic	0.04mfd±20%
C19	Ceramic	560mmfd±20%
C21	Polystiyrole	1000mmfd±5%
C23	Mylar	0.1mfd±20%
C24	Electrolytic Tubular	10mfd 16WV
C25	Electrolytic Tubular	1mfd 25WV
C26	Electrolytic Tubular	10mfd16 WV
C27,28	Mylar	0.1mfd±10%
CT1	Cylinder TRIMMER	20mmfd~40mmfd

C4046

● RESISTORS

Part No.	Symbol No.	Description			
L02-82	R1	Composition	270Kohm	±10%	1/2W
	R2	Composition	220Kohm	±10%	1/2W
	R3	Composition	4.7Kohm	±10%	1/2W
	R4	Composition	22Kohm	±10%	1/2W
	R5	Composition	1.8Kohm	±10%	1/2W
	R6	Composition	150 ohm	±10%	1/2W
	R7	Composition	10Kohm	±10%	1/2W
	R8	Composition	22Kohm	±10%	1/2W
	R9	Composition	3.3Kohm	±10%	1/2W
	R10	Composition	180 ohm	±10%	1/2W
	R11~14	Carbon	22Kohm	±5%	1/4W
	R15,16	Composition	56Kohm	±5%	1/2W
	R19	Composition	15Kohm	±10%	1/2W
	R20	Composition	10Kohm	±10%	1/2W
	R22	Composition	6.8Kohm	±10%	1/2W
	R26	Composition	100Kohm	±10%	1/2W
	R27	Composition	15Kohm	±10%	1/2W
	R28	Composition	220 ohm	±10%	1/2W
	R29	Composition	4.7Kohm	±10%	1/2W
	R30,31	Composition	33Kohm	±5%	1/2W
	R32	Composition	4.7Kohm	±10%	1/2W
	R33~36	Carbon	220Kohm	±5%	1/4W
	R39	Carbon	3.3Kohm	±10%	1/4W

● POTENTIOMETER

Symbol No.	Description	Part No.
VR1	50Kohm(B) Level Set	R10-56

● COILS

Symbol No.	Description	Part No.
L1	19kHz Tune Coil 10mH	L17-04
L2	19kHz Tune Coil 10mH	L17-05
L3	38kHz Tune Coil	L17-43
L4	72kHz Filter Coil 10mH	L17-44
L5	66kHz Filter Coil 39mH	
L6	19kHz Tune Coil 100mH	L17-23

www.hifiengine.com

PARTS DESCRIPTION LIST

● TRANSISTORS/DIODES

Symbol No.	Description	
Q1	2SC281B	Composite Amp.
Q2	2SC281B	19kHz Amp.
Q3	2SC281B	38kHz Amp.
Q4	2SC281B	19kHz Beacon Signal Amp.
Q5	2SC281B	DC Amp.
Q6	2SB54	DC Amp.
Q7	2SC281B	Switching
D1, 2	1N60	Doubler
D3~6	1N60	MPX Det.
D7	1N60	Noise Cancel
D9	1N60	Switching
TH1	SDT-1000	Stabilizer

PRE AMP (UA13241D) SECTION

● CAPACITORS

Symbol No.	Description		
C1	Electrolytic Tubular	100mfd	6.3WV
C2, 3	Aluminum Solid Electrolytic	3.3mfd	25WV
C4, 5	Electrolytic Tubular	10mfd	16WV
C8, 9	Mylar	3300mmfd	±10%
C10,11	Mylar	0.01mfd	±10%
C12,13	Ceramic	100mmfd	±10%
C14,15	Electrolytic Tubular	47mfd	3.15WV
C16,17	Electrolytic Tubular	4.7mfd	16WV
C18,19	Electrolytic Tubular	47mfd	25WV
C20~23	Electrolytic Tubular	10mfd	16WV
C24	Ceramic	0.005mfd	±20%
C25	Electrolytic Tubular	100mfd	3.15WV
C26,27	Ceramic	560mmfd	±20%
C30,31	Ceramic	560mmfd	±20%

● RESISTORS

Symbol No.	Description			
R1,2	Carbon	2.2Kohm	±10%	1/4W
R3,4	Carbon	220Kohm	±10%	1/4W
R5	Carbon	3.9Kohm	±10%	1/4W
R6	Carbon	10Kohm	±10%	1/4W
R7,8	Composition	15Kohm	±10%	1/4W
R9,10	Carbon	470 ohm	±5%	1/4W
R13,14	Composition	24Kohm	±5%	1/4W
R15,16	Carbon	750Kohm	±5%	1/4W
R17,18	Composition	560Kohm	±10%	1/4W
R19,20	Carbon	5.6Kohm	±10%	1/4W
R21,22	Carbon	820 ohm	±10%	1/4W
R23,24	Carbon	1Mohm	±10%	1/4W
R25,26	Carbon	47Kohm	±10%	1/4W
R27,28	Carbon	470 ohm	±10%	1/4W
R29,30	Composition	5.6Kohm	±10%	1/4W
R31,32	Carbon	100 ohm	±10%	1/4W
R33,34	Composition	390Kohm	±10%	1/4W
R35,36	Carbon	15Kohm	±5%	1/4W

● POTENTIOMETER

Symbol No.	Description	Part No.
VR1	5Kohm(B) Separation Control	R10-53

● TRANSISTORS

Symbol No.	Description	
Q1,2	2SC350(R)	phono E.Q. AF Amp.
Q3,4	2SC350(Y)	phono E.Q. AF Amp.
Q5	2SC350(G)	Channel Right AF Amp.
Q6	2SC350(G)	Channel Left AF Amp.

www.hifiengine.com

PARTS DESCRIPTION LIST

MAIN AMP (821) SECTION

● CAPACITORS

Symbol No.	Description
C1	Electrolytic Tubular 10mfd 12WV
C2,3	Electrolytic Tubular 1mfd 25WV
C4	Ceramic 100 mmfd ±10%
C5	Electrolytic Tubular 47mfd 25WV
C6	Ceramic 250mmfd ±10%
C7	Electrolytic Tubular 10mfd 12WV
C8,9	Electrolytic Tubular 1mfd 25WV
C10	Ceramic 100 mmfd ±10%
C11	Electrolytic Tubular 47mfd 25WV
C12	Ceramic 250mmfd ±10%
C13,14	Electrolytic Tubular 100mfd 3.15WV
C15	Electrolytic Tubular 47mfd 25WV
C16,17	Electrolytic Tubular 100mfd 6.3WV
C18,19	Ceramic 100mmfd±10%
C20,21	Electrolytic Tubular 47mfd 6.3WV

● RESISTORS

Symbol No.	Description
R1	Carbon 100Kohm ±10% 1/4W
R2	Carbon 22Kohm ±10% 1/4W
R3	Carbon 5.6Kohm ±10% 1/4W
R4	Carbon 100 ohm ±10% 1/4W
R5	Composition 180Kohm ±10% 1/2W
R8	Composition 4.7Kohm ±10% 1/2W
R9	Composition 100 ohm ±10% 1/2W
R10	Composition 10Kohm ± 10% 1/2W
R11	Composition 2.2Kohm ±10% 1/2W
R12	Composition 330 ohm ±10% 1/2W
R13	Composition 33 ohm ±10% 1/2W
R14	Composition 330 ohm ±10% 1/2W
R15	Carbon 100Kohm ±10% 1/4W
R16	Carbon 22Kohm ±10% 1/4W
R17	Carbon 5.6Kohm ±10% 1/4W
R18	Carbon 100 ohm ±10% 1/4W
R19	Composition 180Kohm ±10% 1/2W
R22	Composition 4.7Kohm ±10% 1/2W
R23	Composition 100 ohm ±10% 1/2W
R24	Composition 10Kohm ± 10% 1/2W
R25	Composition 2.2Kohm ±10% 1/2W
R26	Composition 330 ohm ±10% 1/2W
R27	Composition 33ohm ±10% 1/2W
R28	Composition 330 ohm ±10% 1/2W
R29	Composition 100Kohm ±10% 1/2W
R30	Composition 3.3Kohm ±10% 1/2W

● RESISTORS

Symbol No.	Description
R31	Composition 1Kohm ±10% 1/2W
R32,33	Carbon 2.2Kohm ±10% 1/4W
R34	Composition 33ohm ±10% 1/2W
R35	Composition 3.3Kohm ±10% 1/2W

● POTENTIOMETERS

Symbol No.	Description	Part No.
VR1,2	30Kohm(B) DC Bias	R10-55
VR3,4	10Kohm(B) Protection Level	R10-54
VR5,6	500 ohm(B) DC Bias	R10-46

● TRANSISTORS/DIODES

Symbol No.	Description
Q1	2SC350(G) Channel Left AF Amp.
Q2	2SC317 or 2SC734(O) Channel Left Driver
Q3	2SC317(R) or 2SC734(O) Complementary
Q4	2SB89A Complementary
Q5	2SC317(R)or 2SC734(O)Complementary
Q6	2SB89A Complementary
Q7	2SC317 or 2SC734(O)Channel Right Driver
Q8	2SC350(G) Channel Right AF Amp.
Q9	2SC458B or 2SC458C Protection
D1,2	1N60 or SD46 Rect.
D4~7	FR1S Stabilizer

MAIN CHASSIS (AB43) SECTION

● RESISTORS

Symbol No.	Description
R1~6	Composition 22Kohm±10% 1/2W
R7,8	Composition 3.3Kohm±10% 1/2W
R9,10	Composition 5.6Kohm±10% 1/2W
R11,12	Composition 150Kohm±10% 1/2W
R13,14	Composition 1.5Kohm±10% 1/2W
R15,16	Composition 6.8Kohm±10% 1/2W
R17~20	Wire wound 0.47ohm±10% 1W
R21,22	Composition 4.7ohm±10% 1/2W
R23	Composition 56ohm±10% 1/2W
R24,25	Composition 1Kohm±10% 1/2W
R26,27	Composition 330ohm±10% 1/2W
R28	Composition 2.2Kohm±10% 1/2W

www.hifiengine.com

PARTS DESCRIPTION LIST

Symbol No.	Description
R29	Power type coated Wire Wound 1Kohm±5% 2W
R30	Composition 1.5Kohm±10% 1/2W
R31	Power type coated Wire Wound 200ohm±5% 4W
R33	Composition 150ohm±10% 1/2W
R34	Composition 220ohm±10% 1/2W
R35	Composition 2.2Kohm±10% 1/2W
R36,37	Composition 10ohm±10% 1/2W
R38	Power type coated Wire Wound 560ohm±5% 4W

● CAPACITORS

Symbol No.	Description
C1,2	Ceramic 1000mmfd±20% 50WV
C3,4	Mylar 0.1mfd±20%
C5,6	Mylar 0.2mfd±20%
C7,8	Mylar 0.02mfd±20%
C9,10	Mylar 0.033mfd±20%
C11,12	Mylar 0.0033mfd±20%
C13,14	Mylar 0.0047mfd±20%
C15,16	Electrolytic Block 1000mfd 35WV
C17,18	Mylar 0.2mfd±20%
C19	Electrolytic Tubular 220mfd 25WV
C20	Electrolytic Block 1000mfd 35WV
C21	Electrolytic Tubular 220mfd 16WV
C22	Electrolytic Tubular 100mfd 16WV
C23	Electrolytic Block 2200mfd 50WV
C24	Electrolytic Tubular 470mfd 35WV
C25,26	Paper Tubular 0.02mfd±20% 600WV
C27	Paper Tubular 0.01mfd±20% 600WV
C28	Electrolytic Tubular 1000mfd 16WV
C29,30	Mylar 0.056mfd±10%

● POTENTIOMETERS

Symbol No.	Description		Part No.
VR1	50Kohm(T2-26)x2 VOLUME		R04-2208
VR2	50Kohm(A)x2	BASS	R02-0212
VR3	50Kohm(A)x2	TREBLE	R02-0212

● TRANSISTORS/DIODES

Symbol No.	Description	
Q1	ST303 Regulator	
Q2~5	2SD180 or 2SC494(Y) or 2SC664	Power Amp.
D1	1S338(T)	Rect.
D2,3	DS1M	Rect.
D4	SW-05S or SM-150-01	Rect.
TH1,2	SDT-65	Stabilizer

● SWITCHES

Symbol No.	Description	Part No.
S1	Rotary Y-3·9·3 SELECTOR	S03-646
S2	See Saw TAPE MONITOR	S10-22N
S3	See Saw MODE	S10-22N
S4	See Saw LOUDNESS	S10-22N
S5	See Saw NOISE FILTER	S10-22N
S6	Rotary Y-1·3·5 OUT PUT (with power switch)	S03-253

● MISCELLANEOUS

Symbol No.	Description	Part No.
-	Case	A01-AB43
-	Chassis	A03-AB43
-	Dial Scale	A07-AB43
-	Dial Board	A12-AB11
-	Radiator Board	A26-31
-	Name Plate	B09-109
-	Pully	D04-89

www.hifiengine.com

PARTS DESCRIPTION LIST

Symbol No.	Description	Part No.
-	Flywheel	D05-52B
-	Dial Spring	D06-02
-	Dial String (White)	1.7m D07-01
-	Dial Shaft	D08-87
-	Small pully x 4	D09-14B
-	Small Bush x 3	D10-05
-	Small Bush	D10-09
-	Dial Pointer	D12-60
-	AC Consent	E02-06
-	P.L Socket	E03-02F
-	Lug	E04-040
-	Lug x 5	E04-101
-	Lug x 9	E04-202
-	Terminal Strip 4p x 4	E06-24G
-	Terminal Strip 2p	E06-12J
-	Consent 4p	E07-340
J	Pin Jack	E08-11C
J	Pin Jack	E08-18E
-	Short Plug 4p	E09-340

Symbol No.	Description	Part No.
J	US Jack	E16-13
-	Transistor Socket	E4082
-	Legs	G10-02
-	AC Cord Bushing	G11-01
ANT	FM Antenna	L10-04
-	Knob VOLUME, BASS, TREBLE Dual Front	S14-807
-	Knob TUNING	S14-330
-	Knob VOLUME, TREBLE BASS Dual Back	S14-259
-	Knob OUTPUT, SELECTOR	S14-808
-	Fuse Holder	S15-03B
-	Fuse Holder x 2	S15-09
P.L	Pilot Lamp x 2 DIAL	S16-06
P.L	Pilot Lamp	S16-12
P.L	Pilot Lamp	S16-19
F	Fuse (2A)	S17-02
P.T	Transformer Power	T01-156A
M	Meter TUNING	T11-57

www.hifiengine.com

CHASSIS TOP VIEW

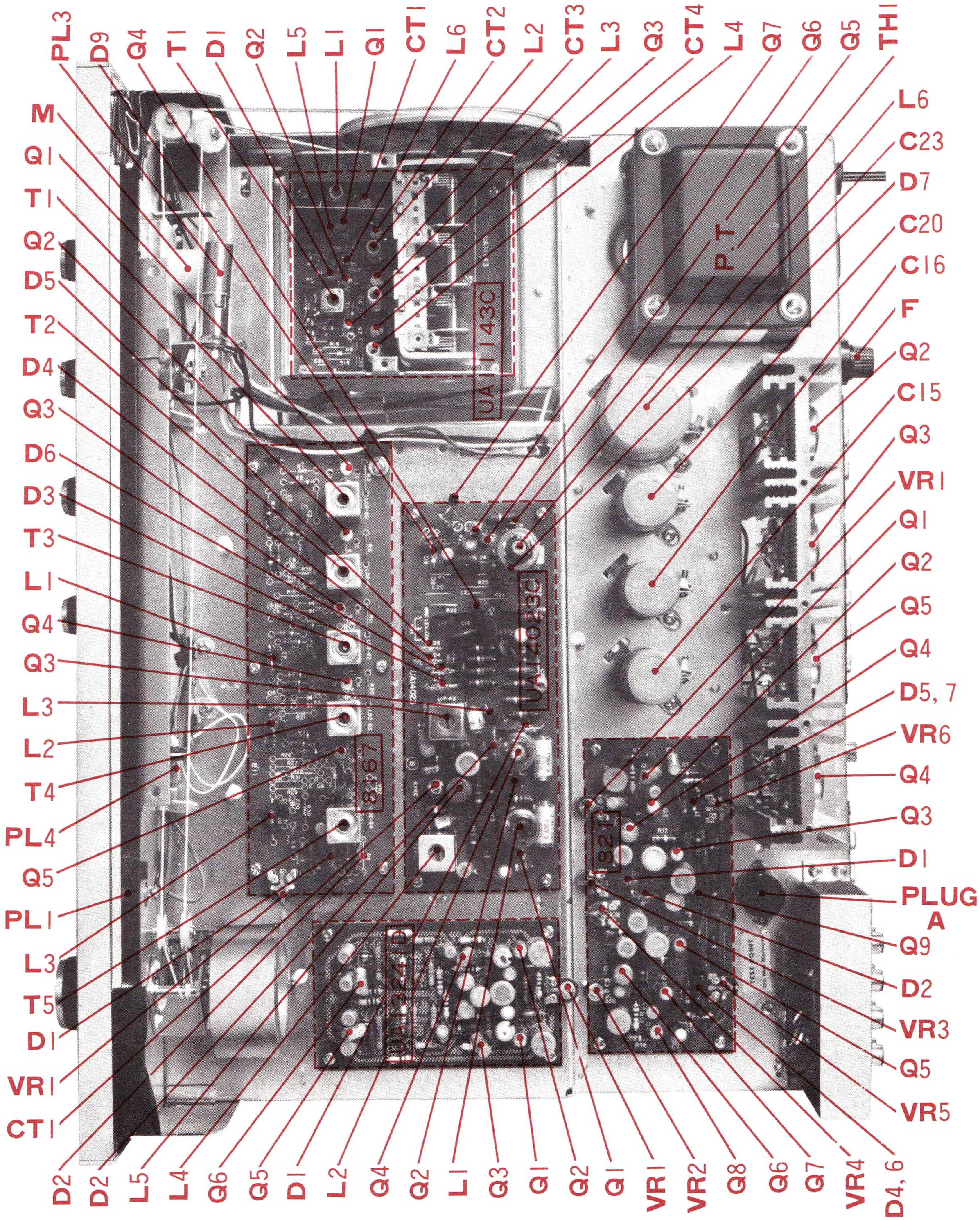

CHASSIS BOTTOM VIEW

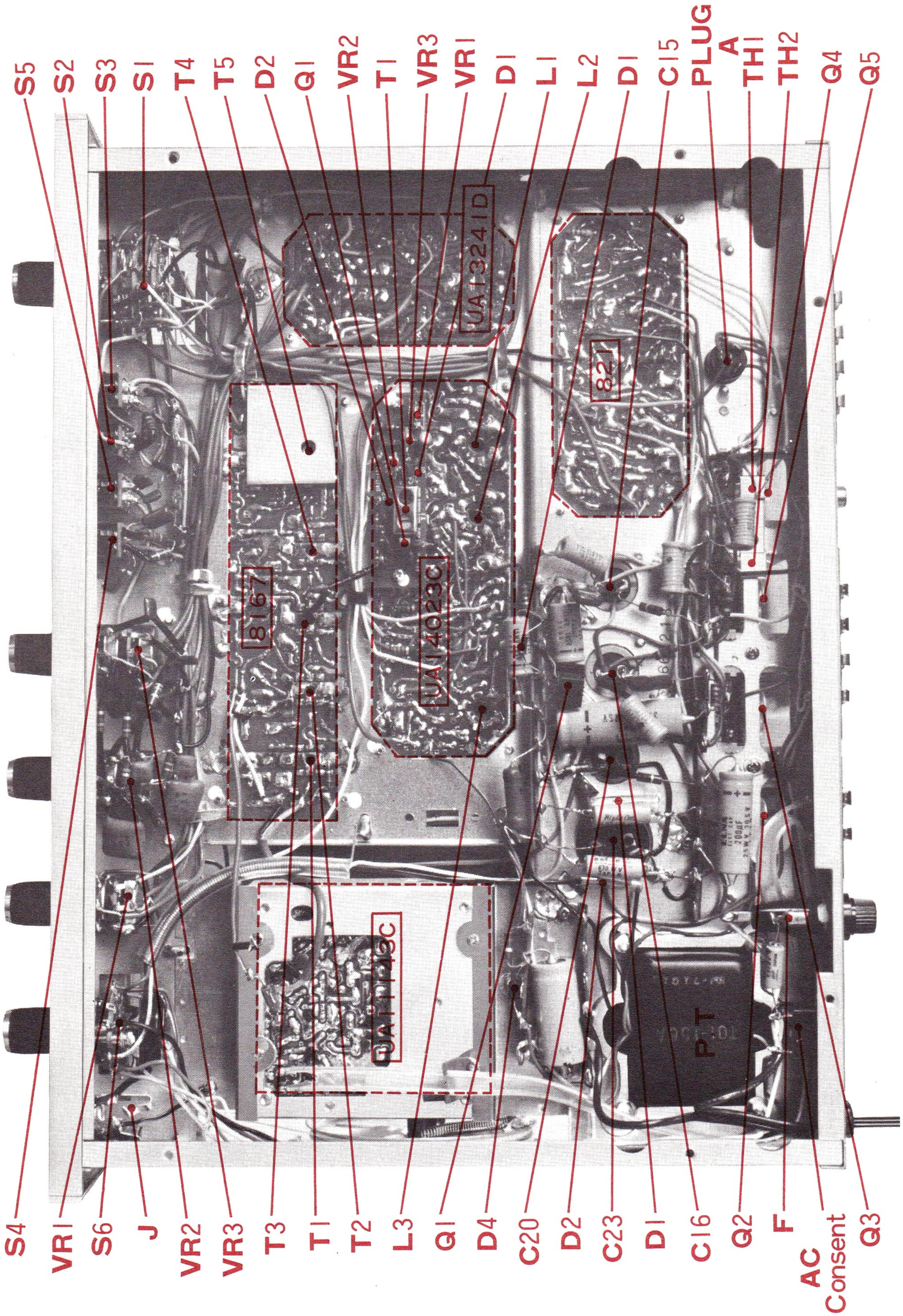

RF (UA1 1 1 43C) Section

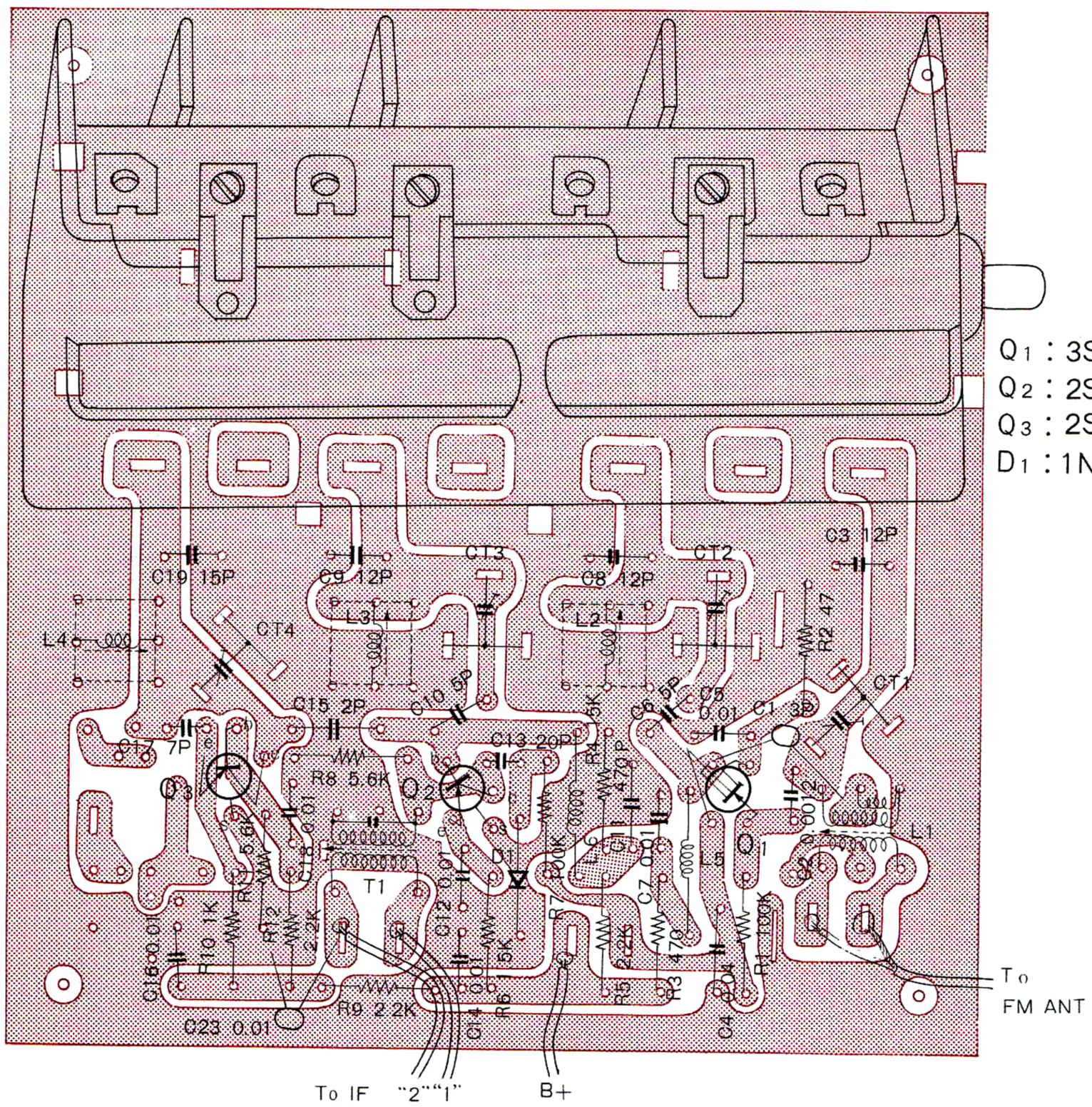

Q_1 : 3SK-22(FET)
Q_2 : 2SA239
Q_3 : 2SA240(2)
D_1 : 1N60

www.hifiengine.com

SEALED CIRCUIT ASSEMBLIES-PHANTOM VIEWS

FM IF (8167) Section

$Q_{1\sim5}$ 2SA234B $D_{1,2}$ 1N60

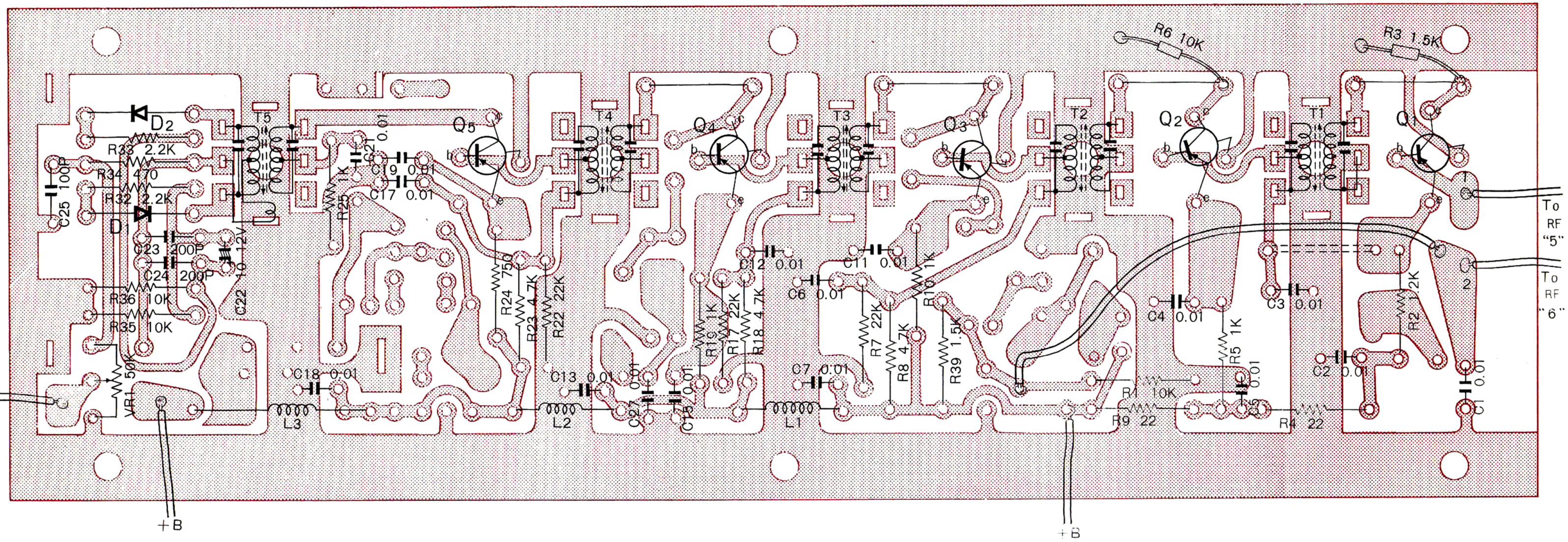

IF (UA12123) Section

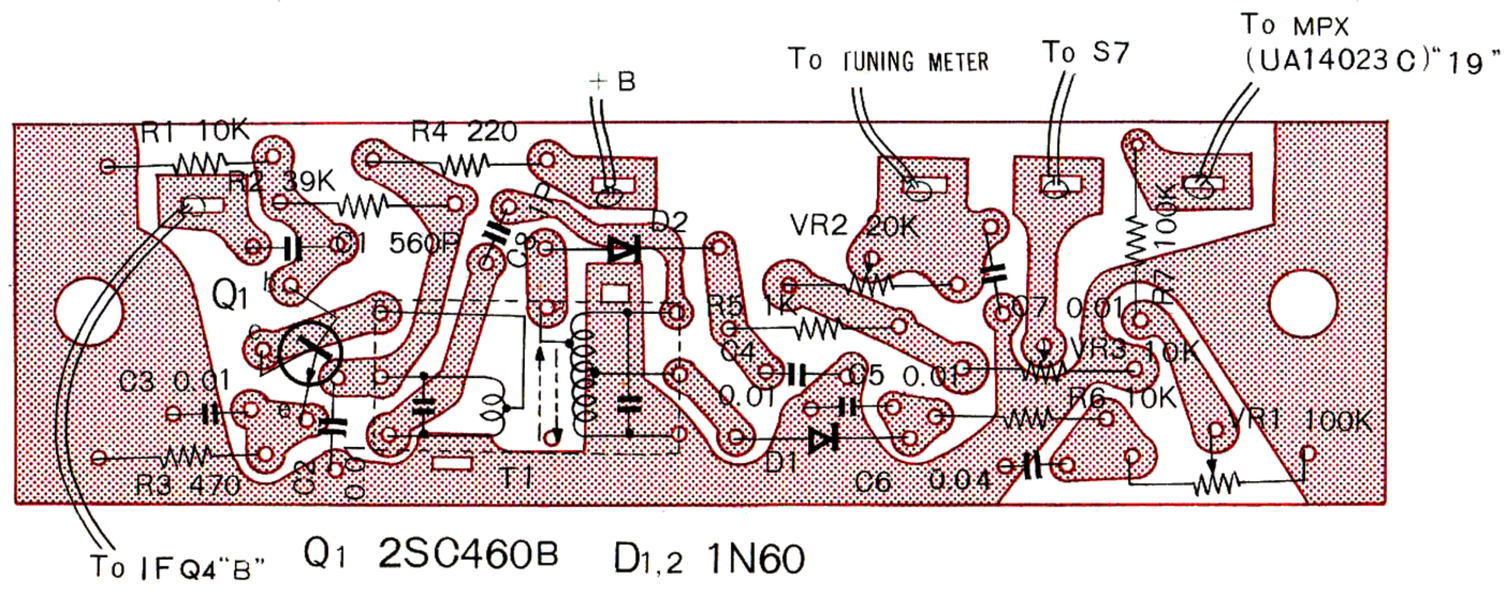

Q_1 2SC460B $D_{1,2}$ 1N60

www.hifiengine.com

MPX (UA14023C) Section

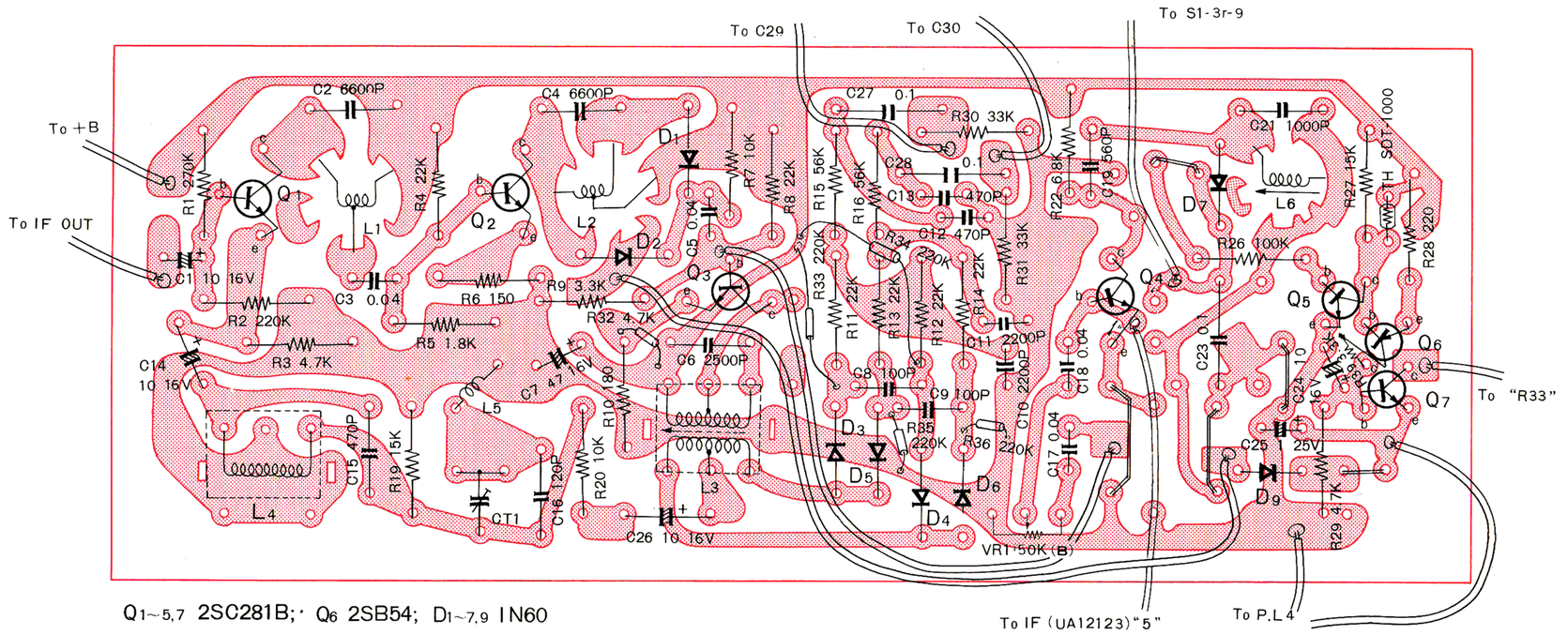

$Q_{1\sim5,7}$ 2SC281B; Q_6 2SB54; $D_{1\sim7,9}$ 1N60

PRE AMP (UA13241D) Section

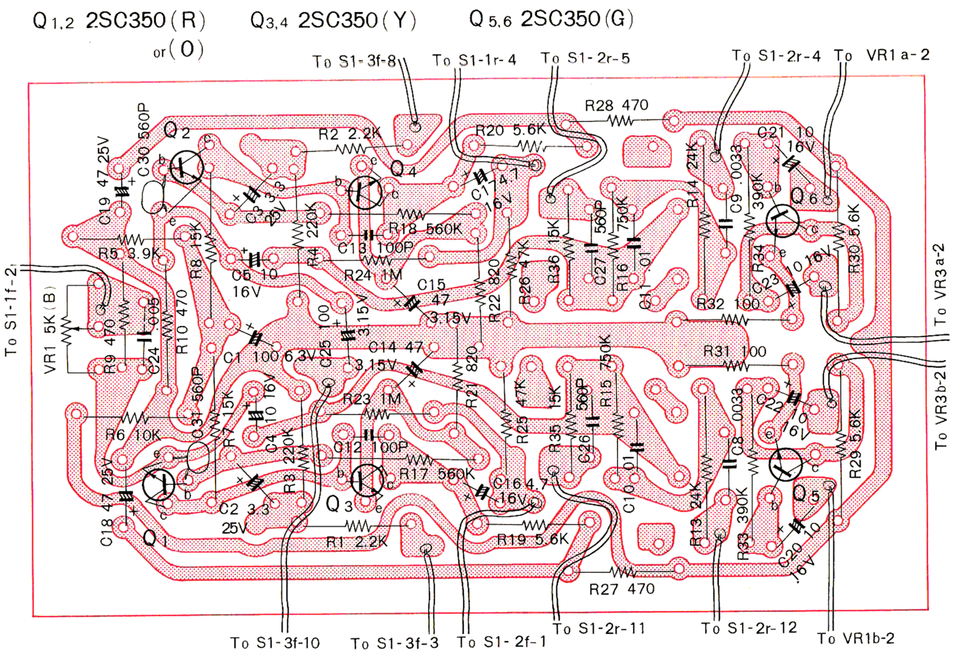

MAIN AMP (821) Section

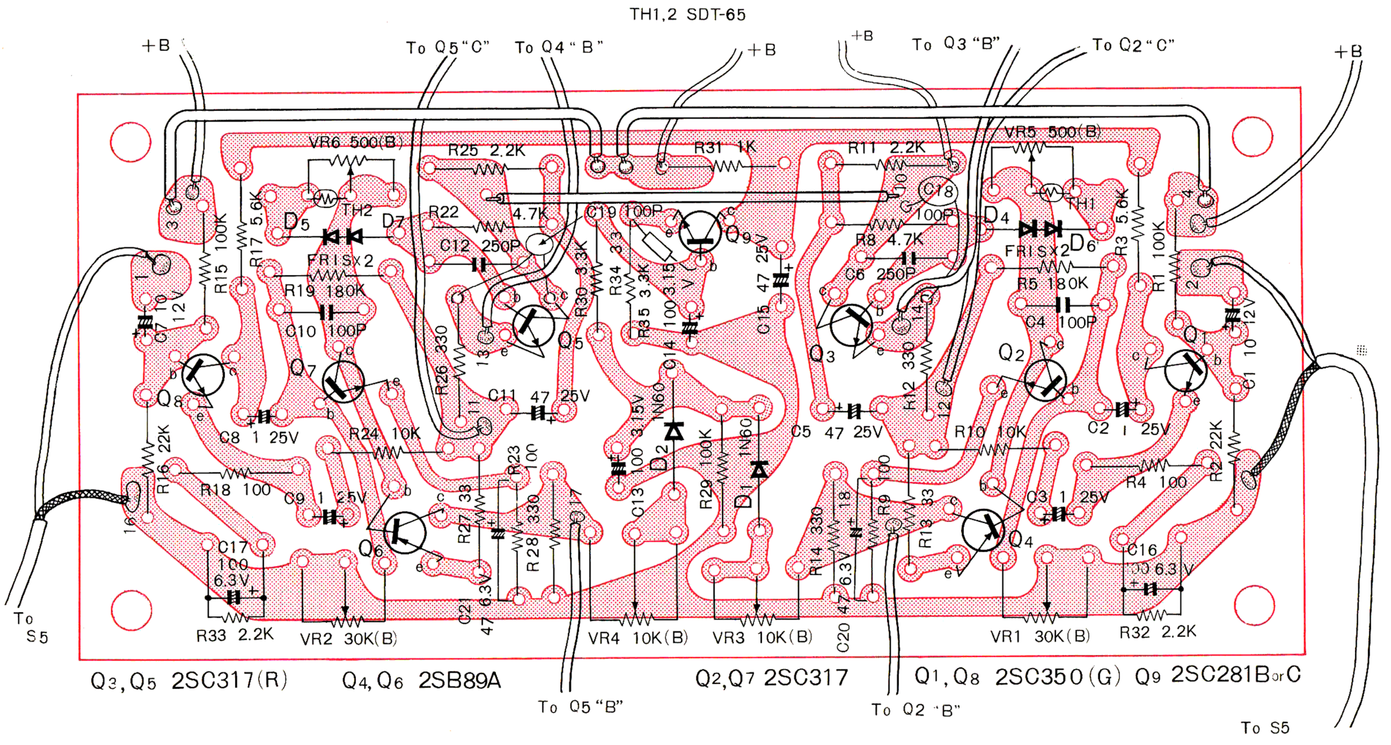

$Q_{3,Q5}$ 2SC317(R) $Q_{4,Q6}$ 2SB89A $Q_{2,Q7}$ 2SC317 $Q_{1,Q8}$ 2SC350(G) Q_9 2SC281B or C

SCHEMATIC DIAGRAM

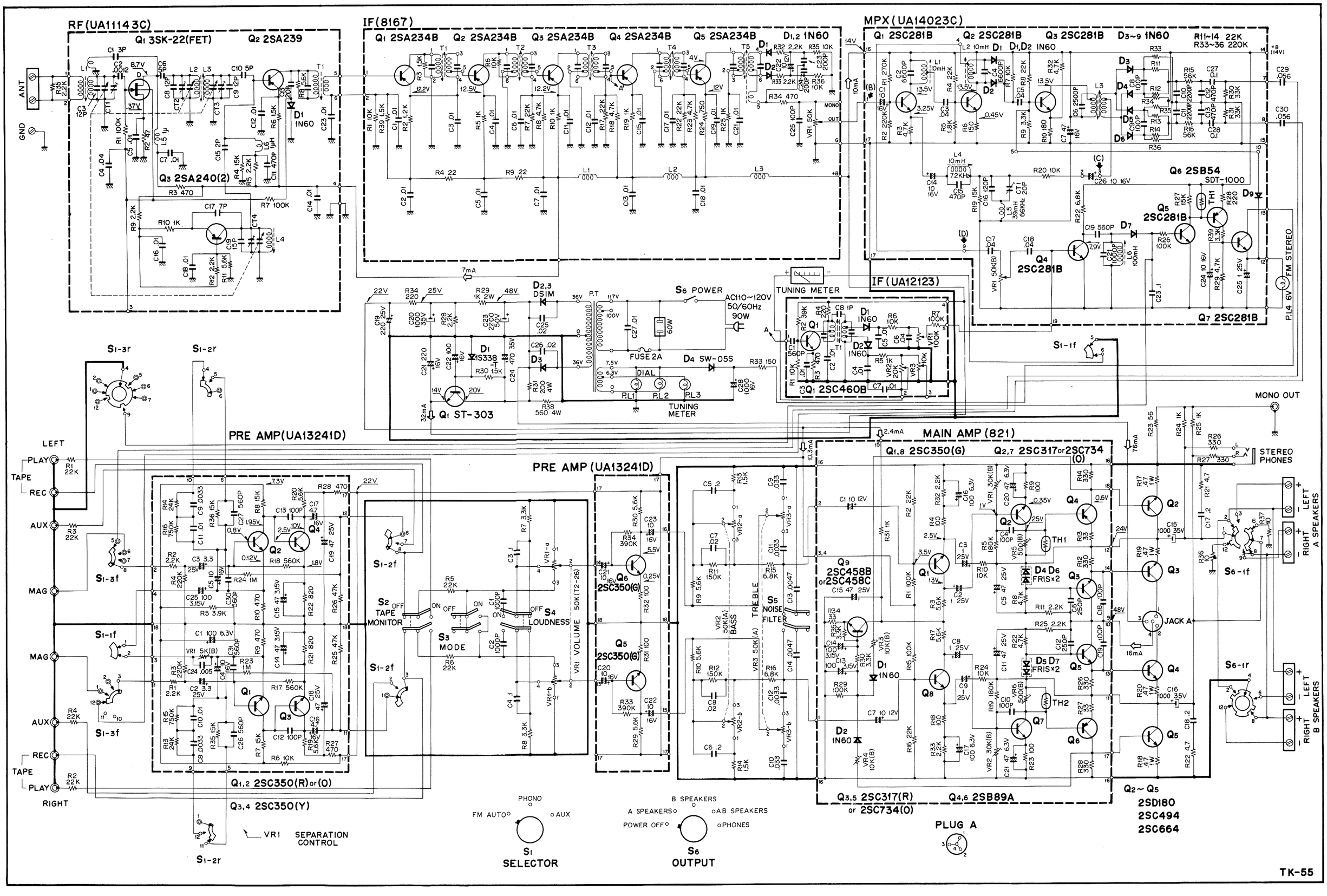

ALIGNMENT PROCEDURE

Please read the following notes carefully before making any alignment adjustment.

1. Generator signal: Always work with the minimum generator signal sufficient to produce a satisfactory output indication.

2. Alignment tool : IF transformers require a plastic screwdriver-type alignment tool.

3. Dial pointer : Check pointer for alignment at left hand start mark.

4. Field strength : At Antenna terminal.

1. FM Section "UA11143C" "8167" "UA12123"

Instruments: FM Stereo signal generator, AC VTVM & Oscilloscope.

STEP	Dummy Antenna	FM Signal Generator Coupling	FM Signal Generator Frequency	Selector Switch	Tuning Dial Setting	Indicating Meter	Adjust	Remarks
1	Direct	FM Antenna terminal	10.7 MHz (Unmod.)	FM AUTO	Any non-interfering setting	Tuning Indicator	"UA11143C" T1 "8167" T1~4 Top & Bottom	Maximum Deflection
2	300 ohm Balanced Carbon Resistor	FM Antenna terminal	98 MHz MOD.F 400 Hz DEV.±75kHz F.S. 500~1000 μV	FM AUTO	Tune for maximum, using tuning indicator	VTVM at LEFT output jack of TAPE REC	"8167" T5 Top & Bottom	Maximum Deflection
3	300 ohm Balanced Carbon Resistor	FM Antenna terminal	90 MHz MOD.F 400 Hz DEV.±75kHz FM	FM AUTO	90 MHz	VTVM & Xtal earphone at LEFT output jack of TAPE REC	"UA11143C" L1~4	Maximum Deflection
4	300 ohm Balanced Carbon Resistor	FM Antenna terminal	106 MHz MOD.F 400 Hz DEV.±75kHz FM	FM AUTO	106 MHz	VTVM & Xtal earphone at LEFT output jack of TAPE REC	"UA11143C" CT1~4	Maximum Deflection
5	Repeat steps 3 & 4 until no further improvement is possible.							
6	300 ohm Carbon Resistor	FM Antenna terminal	98 MHz MOD.F 400 Hz DEV.±75kHz F.S 1000μV	FM AUTO	Tune for maximum using tuning indicator	VTVM & Xtal earphone at LEFT output jack of TAPE REC	"8167" VR1	Set the Output level to 1.5V
7	300 ohm Carbon Resistor	FM Antenna terminal	98 MHz F.S ±75kHz F.S 1000μV	FM AUTO	Tune for maximum deflection, VTVM & Xtal earphone at LEFT output jack of TAPE REC.	Tuning indicator	"UA12123" T1 VR2	"4" Indicated
8	300 ohm Carbon Resistor	FM Antenna terminal	(1) F.S 1000μV →10μV (2) F.S 1000μV →3μV	FM AUTO	98 MHz	VTVM & Oscilloscope at LEFT output jack of TAPE REC	"UA12123" VR3	(1) Muting SW ON, within -1dB (VTVM) (2) Muting SW ON, more than -40dB (VTVM)

Confirm the presence of 400 Hz signal with crystal earphone.

www.hifiengine.com

2. MPX Section "UA14023C"

(a) SCA Filter

Instruments : Audio signal generator, AC VTVM & Oscilloscope.

Selector switch: "FM AUTO" position.

STEP	Audio Signal Generator Coupling	Audio Signal Generator Frequency	VTVM & Oscilloscope Coupling	Adjust	Remarks
1	High side to (B) Low side to chassis	72 kHz (0.5V)	High side to (C) Low side to chassis	"UA14023C" L4	Minimum deflection
2	High side to (B) Low side to chassis	66 kHz (0.5V)	High side to (C) Low side to chassis	"UA14023C" CT1	Minimum deflection

Refer to MPX block "UA14023C" in schematic diagram for test point.

(b) MPX

Instruments: FM Stereo Signal Generator, Audio signal generator, AC VTVM. & Oscilloscope.

(Field Strength: 1000 μ V at Antenna Terminal)

STEP	FM Stereo Signal Generator			19kHz Pilot Carrier Switch	Selector Switch	AC VTVM & Oscilloscope Connection	Adjust	Remarks
	Coupling	Modulation Frequency	Input Selector					
1	FM Antenna terminal	OFF	OFF	ON	FM AUTO	High side to (D), Low side to chassis	"UA14023C" L1, L2	Maximum deflection
2	To distant of Antenna terminal	400Hz	A + B or REVERSE	ON	FM AUTO	LEFT or RIGHT output jack of TAPE REC	"UA14023C" L2, L3	To obtain a wave form with maximum amplitude and minimum distortion at 400 Hz on oscilloscope
3	FM Antenna terminal	2000 Hz	A or LEFT	ON	FM AUTO	RIGHT output	"UA13241D" VR 1	Minimum deflection
4	FM Antenna terminal	2000 Hz	B or RIGHT	ON	FM AUTO	LEFT output	"UA13241D" VR 1	Minimum deflection
5	Repeat steps 3 & 4 until no further improvement is possible.							

www.hifiengine.com

(c) BEACON

Instrument: FM Stereo Signal Generator, Audio Signal Generator, AC VTVM, DC VTVM (or Circuit Tester) & Oscilloscope.

STEP	FM Stereo Signal Generator			19kHz Pilot Carrier Switch	Selector Switch	AC VTVM & Oscilloscope Connection	DC VTVM or Circuit Tester Connection	Adjust	Remarks
	Coupling	Modulation Frequency	Input Selector						
1	FM Antenna terminal	98 MHz MOD.F 400 Hz DEV.±67.5kHz F.S 1000 μ V	NORMAL	ON	FM AUTO	LEFT or RIGHT output jack of TAPE REC	"UA14023C" "C" of Q4 (T.P)	"UA12123" VR 1	6V±1.5V(DC VTVM)
2	FM Antenna terminal	DEV. 25 kHz±5kHz	NORMAL	ON	FM AUTO	LEFT or RIGHT output jack of TAPE REC	OFF	"UA14023C" VR 1	Beacon lamp "ON"
3	FM Antenna terminal	DEV. 25 kHz±5kHz	NORMAL	ON	FM AUTO	LEFT or RIGHT output jack of TAPE REC	OFF	"UA14023C" L 6	Beacon Lamp Maximum Brightness
4	FM Antenna terminal	DEV. 25 kHz±5kHz	NORMAL	ON	FM AUTO	LEFT or RIGHT output jack of TAPE REC	OFF	"UA14023C" VR 1	Beacon Lamp Threshold of light off
5	FM Antenna terminal	DEV.±67.5kHz 10 μ V	NORMAL	ON	FM AUTO	LEFT or RIGHT output jack of TAPE REC	OFF		Certify the light of beacon lamp.

www.hifiengine.com

PROCEDURE FOR REPLACING OUTPUT TRANSISTOR

Symptoms:

A. When the fuse has blown out on hum at speakers.

B. When there is no output at all.

C. When you cannot get rated output.

Replacing Method:

2SD180 (NEC) Can be replaced by 2SC494(Y) (Toshiba), 2SC664 (Hitachi) and 2N1488 ~ 90, 2N3055, 2N3772 (RCA).

Adjusting Procedures:

Connect dummy load to 16 ohm output terminals, and connect to the oscilloscope input in parallel.
Set audio generator at 100mV 1000Hz and connect to the AUX terminals.
Advance the front panel volume control until the sine-wave just begins to clip on the oscilloscope. Adjust balance control VR1 (LEFT) or VR2 (RIGHT) on the print board "821" until clipping is symmetrical.

Testing Procedures:

Until replacement is completed, do not operate the set the unit without first testing. Perform the test according to the following procedures.

1. Using variable transformer, lower the AC line voltage to approximately 30 volts.

2. Using a tester, measure the voltage between the chassis and "C" of the power transistor Q4 or Q3.
If a tester indicates approximately 48V, it is normal.

3. Also measure the voltage between the chassis and "C" of the power transistor Q5 or Q2.
If a tester indicates approximately 24V, it is normal.

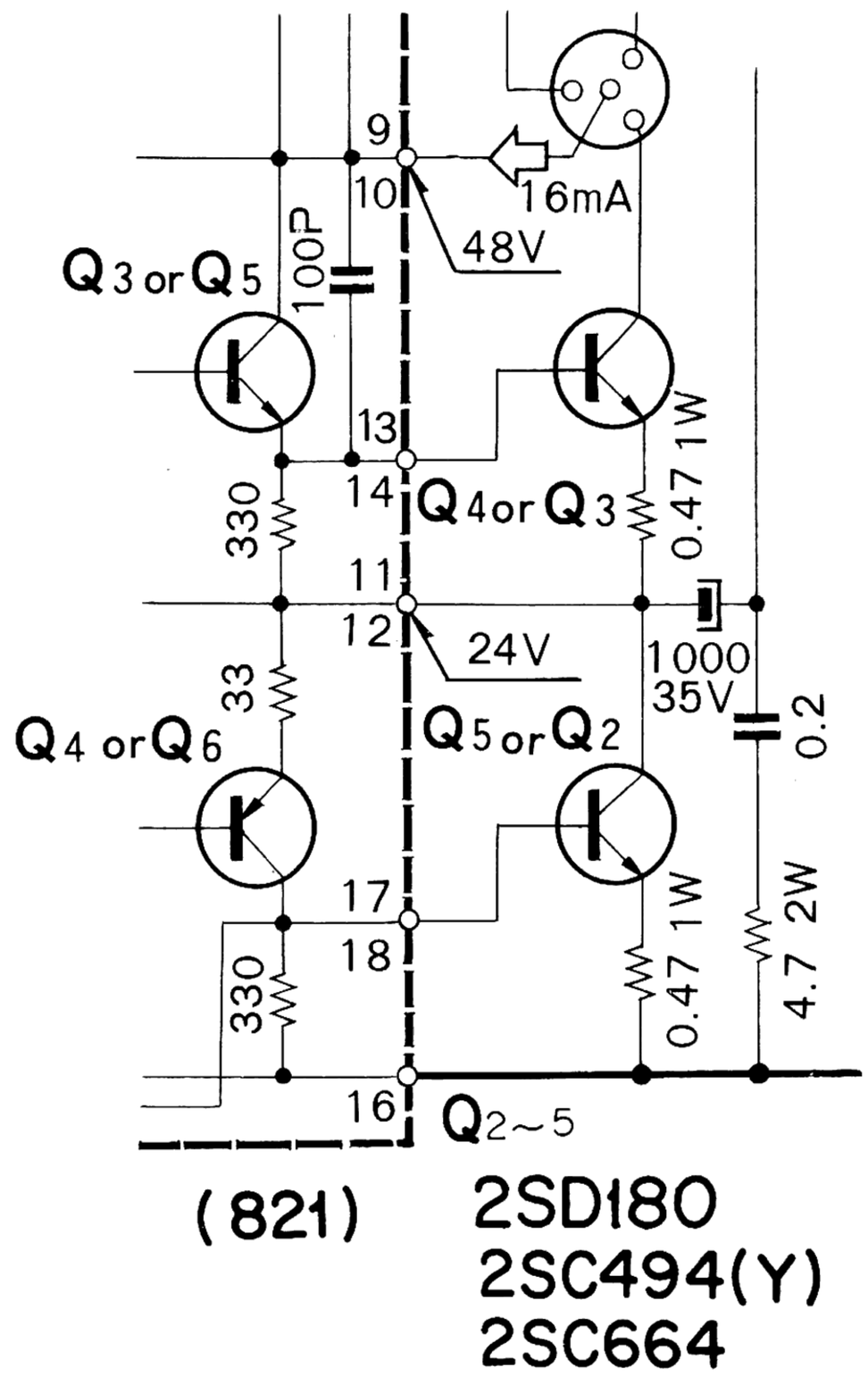

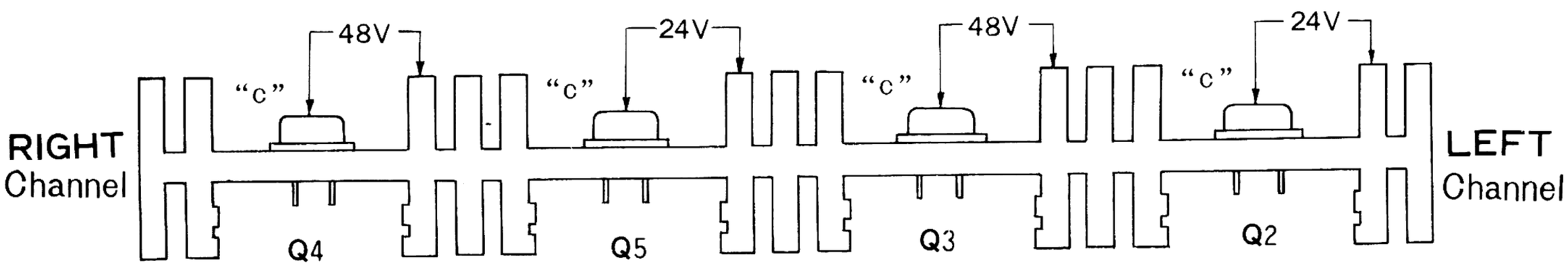

DIAL CORD STRINGING

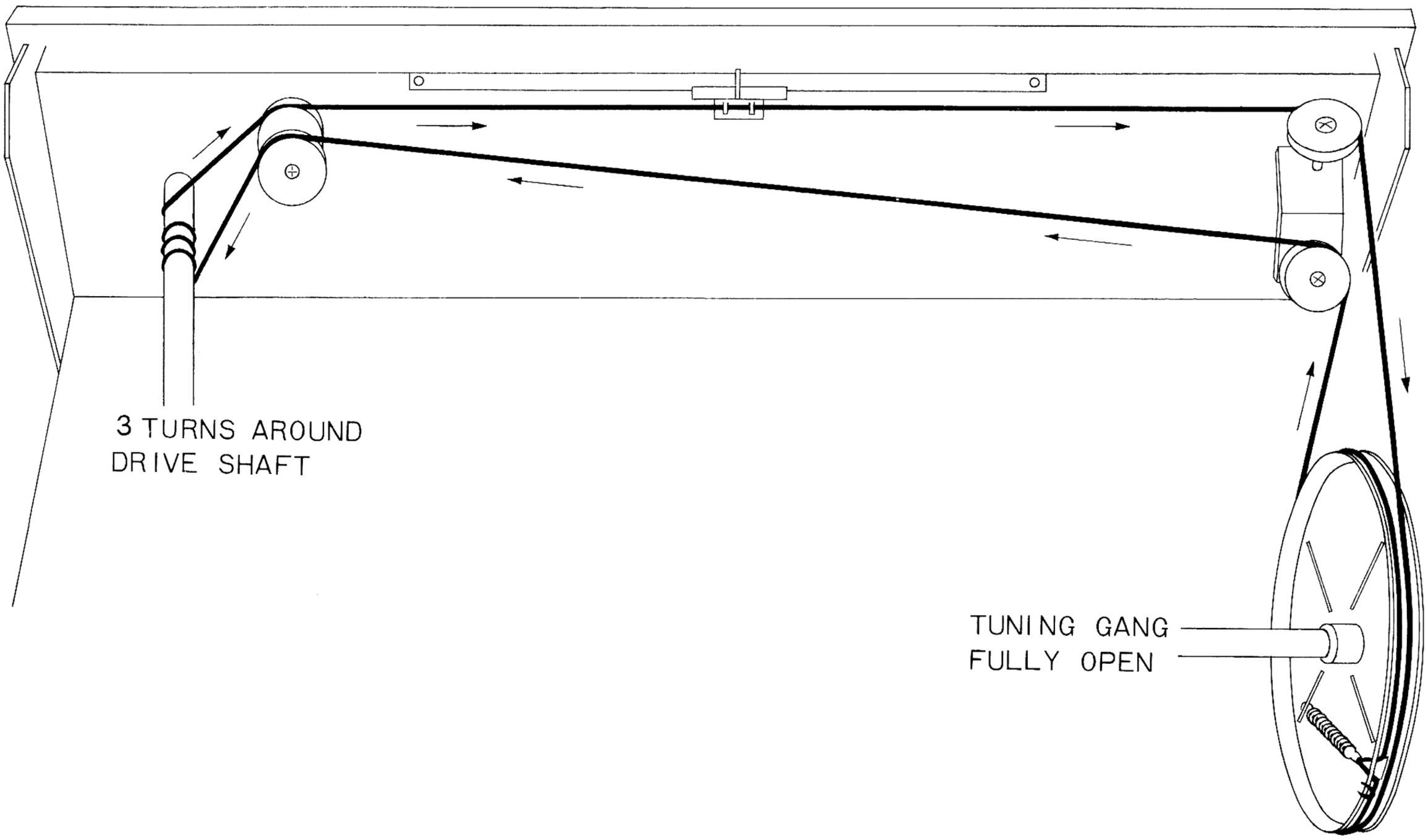

www.hifiengine.com

KENWOOD ELECTRONICS, INC.

- 3700 SOUTH BROADWAY PLACE, LOS ANGELES, CALIFORNIA 90007
- 69-41 CALAMUS AVENUE, WOODSIDE, N.Y. 11377

CANADIAN EXCLUSIVE DISTRIBUTOR

PERFECT MANUFACTURING & SUPPLIES CORP. LTD.

- 4980 BUCHAN ST. MONTREAL P. Q, CANADA
- 14 BANIGAN DRIVE THORNCLIFFE PARK TORONTO CANADA

1968·3 PRINTED IN JAPAN

www.hifiengine.com

KENWOOD

SOLID STATE FM STEREO RECEIVER

TK-55

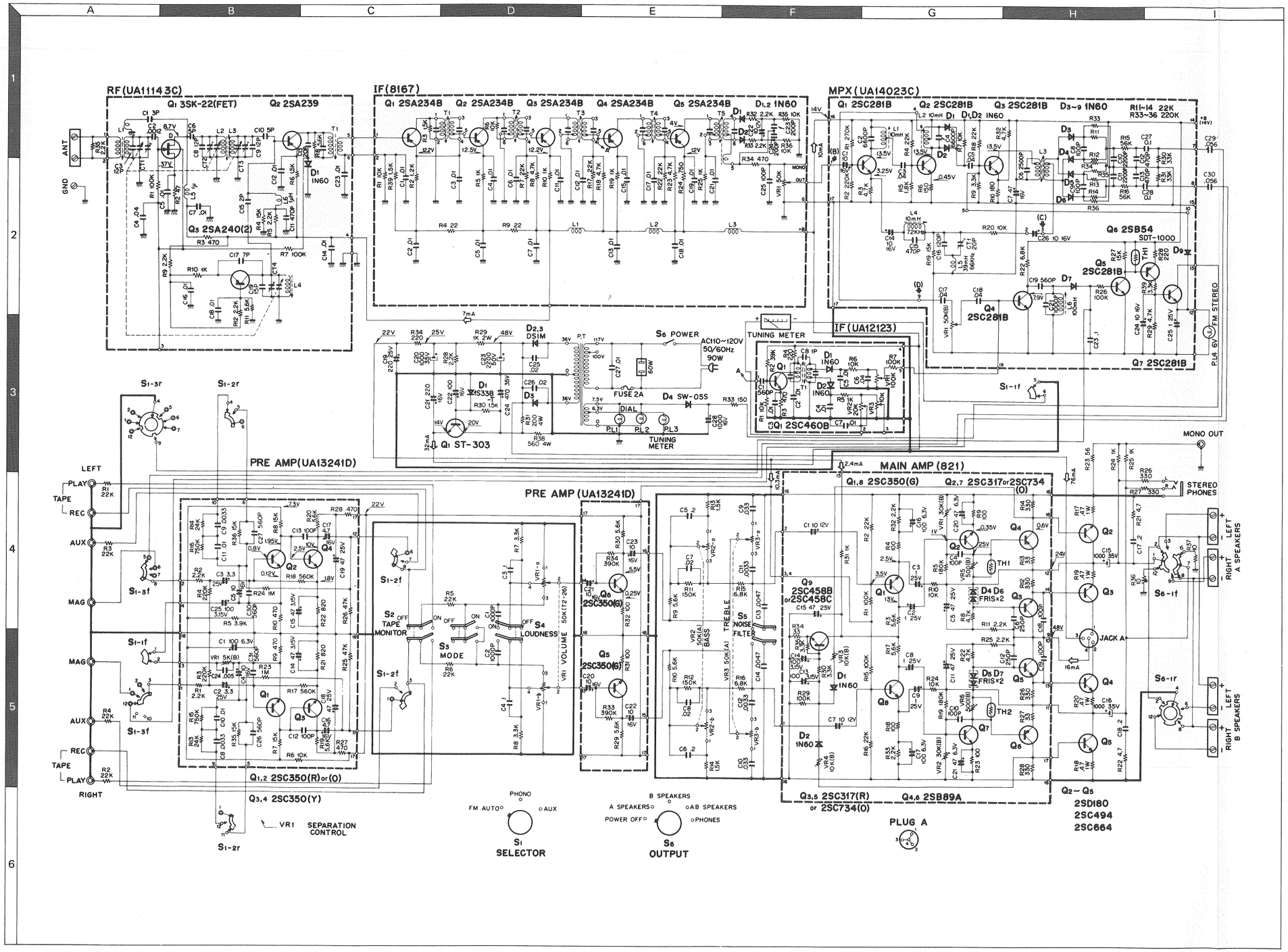

SPECIFICATIONS

AMPLIFIER SECTION

TOTAL MUSIC POWER: 60 watts (IHF Standard 4 ohms)
50 watts (IHF Standard 8 ohms)

CONTINUOUS POWER: 20 watts per channel (0.5% T.H.D.)

IM DISTORTION: less than 0.3%
(−3 dB rated output)

FREQUENCY RESPONSE: 20 Hz — 50,000 Hz (±1 dB)

POWER BANDWIDTH: 20 Hz — 30,000 Hz (−3 dB)

SIGNAL TO NOISE RATIO: PHONO −60 dB
(below rated output) AUX −70 dB

INPUT SENSITIVITY: PHONO 2 mV, AUX 150 mV, TAPE PLAY 150 mV

MAXIMUM INPUT SIGNAL: 100 mV P-P (1,000 Hz)
(Mag input) 560 mV P-P (10,000 Hz)

DAMPING FACTOR: 46 (at 8 ohms), 23 (at 16 ohms)

BASS CONTROL: ±10 dB (at 50 Hz)

TREBLE CONTROL: ±10 dB (at 10,000 Hz)

VOLUME CONTROL TRACKING ERROR: Within 3 dB

CENTER CHANNEL OUTPUT: Yes

SPEAKER IMPEDANCE: 4 — 16 ohms

TUNER SECTION

USABLE SENSITIVITY: FM; 2.5 microvolts (IHF Standard)

FREQUENCY RESPONSE: 20 — 20,000 Hz ±2 dB

HARMONIC DISTORTION: 0.6% (1,000 Hz 100% mod.)

SIGNAL TO NOISE RATIO: 60 dB

CAPTURE RATIO: 2.5 dB

SELECTIVITY: 45 dB
(Alt. Channel)

STEREO SEPARATION: 38 dB (at 400 Hz)

IMAGE REJECTION: 60 dB

CROSS MODULATION REJECTION: 80 dB

IF STAGES: 5

STEREO MONO AUTO SWITCHING: Yes

FRONT END: FET, FM 4 Gang

POWER CONSUMPTION: AC 50 — 60 Hz 110 — 120 Volts 90 watts
(at full power)

DIMENSION: 16¾″ W, 5½″ H, 14⅛″ D.

NET WEIGHT: 20.2 Lbs.