KENWOOD

HI/FI STEREO COMPONENTS

SERVICE MANUAL

. . . the sound

approach

to quality

MODEL TK-66

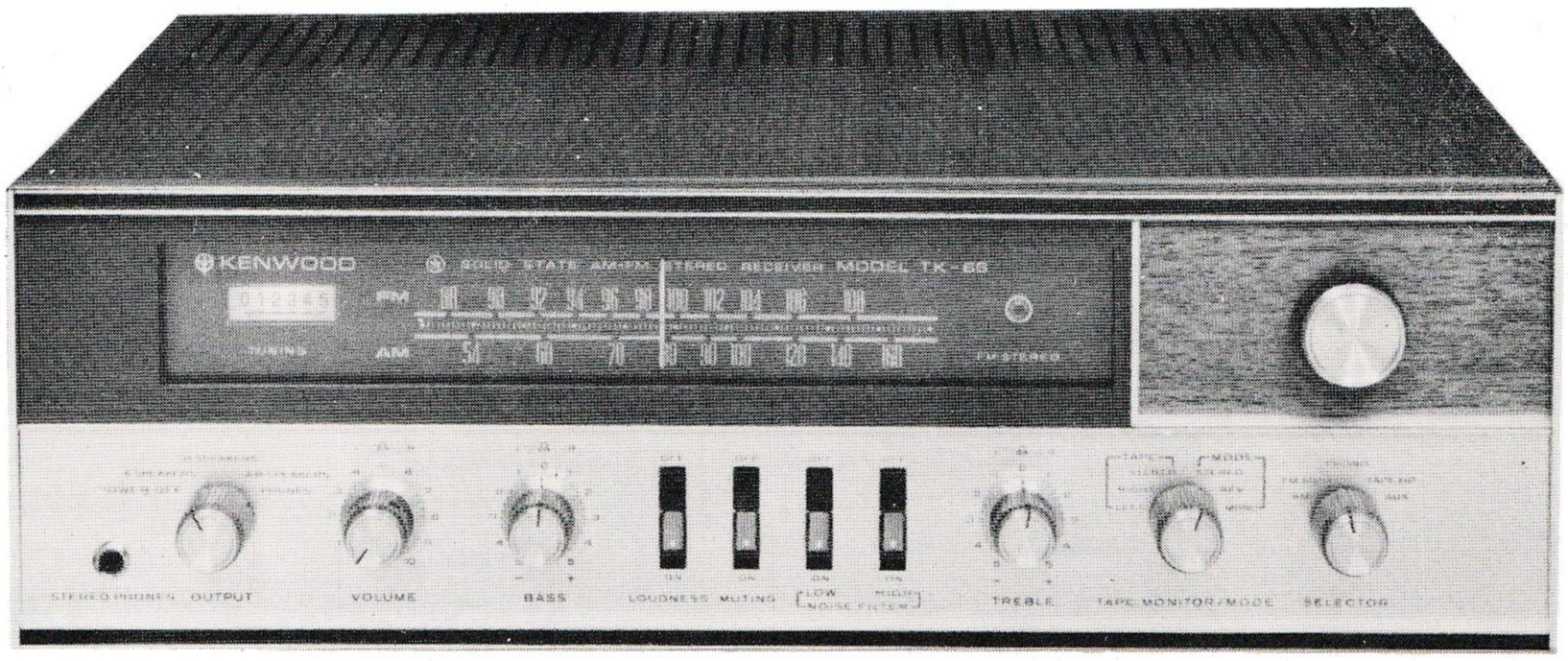

SOLID STATE
AM-FM STEREO RECEIVER

www.hifiengine.com

PARTS DESCRIPTION LIST

RF(UA11083B) SECTION

● CAPACITORS

Symbol No.	Description	
C1	Ceramic	0.001mfd+100%,-0%
C2	Ceramic	12mmfd±10%
C3	Ceramic	0.01mfd+100%,-0%
C4	Ceramic	0.001mfd+100%,-0%
C5	Ceramic	200mmfd±10%
C6	Ceramic	10 mmfd±10%
C7	Ceramic	0.01mfd+100%,-0%
C8	Ceramic	5mmfd±0.5mmfd
C9	Ceramic	3mmfd±0.5mmfd
C10	Ceramic	470mmfd±10%
C11~14	Ceramic	0.01mfd+100%,-0%
C15	Ceramic	7mmfd±0.5mmfd
C16	Ceramic	0.01mfd+100%,-0%
C18	Ceramic	15mmfd±10%
C22	Ceramic	15mmfd±10%
CT1~3	Cylinder TRIMMER	C08-100D
CT4	Ceramic TRIMMER	C4036

● RESISTORS

Symbol No.	Description	
R1	Composition	100K±10% 1/4W
R3,4	Composition	47 ohm±10% 1/4W
R4	Composition	470 ohm±10%1/4W
R5	Composition	15K±10% 1/4W
R6	Composition	2.2K±10% 1/4W
R7	Composition	1.5K±10% 1/4W
R8	Composition	5.6K±10% 1/4W
R9	Composition	220 ohm±10% 1/4W
R10	Composition	2.2K±10% 1/4W
R11	Composition	1K±10% 1/4W
R12	Composition	2.2K±10% 1/4W
R13	Composition	5.6K±10% 1/4W

● COILS/TRANSFORMER

Symbol No.	Description	Part No.
L1	FM ANT Coil	L24-UA11023AB
L2	FM RF Coil	L24-UA11083RA
L3	FM RF Coil	L24-UA11083RB
L4	FM OSC Coil	L24-UA11023S
L5	Choke Coil	L20-010
L6	Choke Coil	L20-010
L7	FM Choke Coil	L20-080B
T1	FM IFT	L52-10

● TRANSISTORS

Symbol No.	Description	
Q1	3SK22(M9085B) (FET)	FM RF Amp.
Q2	2SA239	FM MIXER
Q3	2SA240	FM OSC

IF(UA12024) SECTION

● CAPACITORS

Symbol No.	Description	
C1	Ceramic	0.04mfd+100%,-0%
C2	Ceramic	0.01mfd+100%,-0%
C3,4	Ceramic	0.04mfd+100%,-0%
C5	Ceramic	0.01mfd+100%,-0%
C6	Ceramic	0.04mfd+100%,-0%
C7	Polystiyrole	1000mmfd±5%
C8~10	Ceramic	0.01mfd+100%,-0%
C11	Polystiyrole	1000mmfd±5%
C12,13	Ceramic	0.01mfd+100%,-0%
C14	Ceramic	30mmfd±10%
C15~18	Ceramic	0.01mfd+100%,-0%
C19,20	Ceramic	200mmfd±10%
C21	Ceramic	100mmfd±10%
C22	Ceramic	0.005mfd+100%,-0%
C23	Ceramic	0.02mfd+100%,-0%
C24	Ceramic	10mmfd±10%
C25	Ceramic	330mmfd±10%
C26,27	Ceramic	0.04mfd+100%,-0%
C28	Ceramic	0.01mfd+100%,-0%
C29	Ceramic	0.002mfd+100%,-0%
C30	Ceramic	0.04mfd+100%,-0%
C31	Electrolytic Tubular	100mfd 15WV
C32	Electrolytic Tubular	10mfd 12WV
C33	Electrolytic Tubular	10mfd 15WV
C34	Electrolytic Tubular	30mfd 15WV
C35	Ceramic	0.04mfd+100%,-0%

www.hifiengine.com

PARTS DESCRIPTION LIST

Symbol No.	Description	
C37	Ceramic	0.01mfd+100%,-0%
C38	Polystiyrole	1000mmfd±5%
C39	Electrolytic Tubular	30mfd 15WV
C40	Ceramic	0.04mfd+100%,-0%
C41	Ceramic	1000mmfd±20%

● RESISTORS

Symbol No.	Description	
R1	Composition	5.6K±10% 1/4W
R2	Composition	1.2K±10% 1/4W
R3	Composition	22 ohm±10% 1/4W
R4	Composition	47K±10% 1/4W
R5	Composition	1K±10% 1/4W
R6	Composition	33K±10% 1/4W
R7	Composition	4.7K±10% 1/4W
R8	Composition	1K±10% 1/4W
R9	Composition	10K±10% 1/4W
R10	Composition	22K±10% 1/4W
R11	Composition	4.7K±10% 1/4W
R12	Composition	1K±10% 1/4W
R14	Composition	22K±10% 1/4W
R15	Composition	4.7K±10% 1/4W
R16	Composition	1K±10% 1/4W
R18	Composition	22K±10% 1/4W
R19	Composition	4.7K±10% 1/4W
R20	Composition	470 ohm±10% 1/4W
R21	Composition	1K±10% 1/4W
R22	Composition	470 ohm±10% 1/4W
R23,24	Composition	2.2K±10% 1/4W
R25,26	Composition	10K±10% 1/4W
R27	Composition	82K±10% 1/4W
R28	Composition	4.7K±10% 1/4W
R29	Composition	1K±10%
R30	Composition	47K±10% 1/4W
R31	Composition	5.6K±10% 1/4W
R33	Composition	3.3K±10% 1/4W
R34	Composition	47K±10% 1/4W
R35	Composition	2.2K±10% 1/4W
R36	Composition	3.3K±10% 1/4W
R38	Composition	100K±10% 1/4W
R39	Composition	2.2K±10% 1/4W
R40	Composition	470 ohm±10% 1/4W
R41	Composition	6.8K±10% 1/4W
R42	Composition	100 ohm±10% 1/4W
R43	Composition	4.7K±10% 1/4W
R45	Composition	56K±10% 1/4W
R46	Composition	15K±10% 1/4W

● POTENTIOMETERS

Symbol No.	Description	Part No.
VR1	50K(B) Level Set	R10-64
VR2	10K(B) Muting Adj.	R10-63
VR3	20K(B) FM Indicator Adj.	R10-68
VR4	20K(B) AM Indicator Adj.	R10-68

● COILS/TRANSFORMERS

Symbol No.	Description	Part No.
L1	Choke Coil	L20-010
L2	Choke Coil	L20-010
L3	Choke Coil	L20-010
L4	AM OSC Coil	L07-12
T1	FM IFT 10.7MHz	L02-60
T2	FM IFT 10.7MHz	L02-61
T3	FM IFT 10.7MHz	L02-79
T4	FM IFT 10.7MHz	L02-80
T5	FM IFT 10.7MHz	L02-64
T6	AM IFT 455kHz	L01-63
T7	AM IFT 455kHz	L01-64
T8	AM IFT 455kHz	L01-65

● TRANSISTORS/DIODES

Symbol No.	Description	
Q1	2SA234B	IF Amp.
Q2	2SA234B	IF Amp.
Q3	2SA234B	IF Amp.
Q4	2SA234B	IF Amp.
Q5	2SA234B	IF Amp.
Q6	2SA354B	AM Converter
Q7	2SC281B	Muting Amp.
Q8	2SB54	Muting Amp.
D1	1N60	AM Det.
D2,3	1N60	FM Det.
D4	1N60	OSC Limiter
D5	1N60	AGC Det.
D6	1N60	FM Indicator Rect.
D7	1N60	Muting Rect.
D8	1N60	Muting Rect.
D9	1N60	AM Indicator Rect.
TH1	SDT-1000	Stabilizer

www.hifiengine.com

PARTS DESCRIPTION LIST

MPX(UA14023A) SECTION

● CAPACITORS

Symbol No.	Description	
C1	Electrolytic Tubular	10mfd 12WV
C2	Polystiyrole	6600mmfd±10%
C3	Ceramic	0.04mfd+100%,-0%
C4	Polystiyrole	6600mmfd±10%
C5	Ceramic	0.04mfd+100%,-0%
C6	Polystiyrole	2500mmfd±10%
C7	Electrolytic Tubular	50mfd 15WV
C8,9	Ceramic	100mmfd±10%
C10,11	Ceramic	2200mmfd+100%,-0%
C12,13	Ceramic	470 mmfd+100%,-0%
C14	Electrolytic Tubular	10mfd 12WV
C15	Polystiyrole	470mmfd±10%
C16	Polystiyrole	120mmfd±10%
C17,18	Ceramic	0.04mfd+100%,-0%
C19	Ceramic	560mmfd+100%,-0%
C20	Mylar	0.1mfd±20%
C21	Polystiyrole	1000mmfd±10%
C22	Ceramic	560mmfd+100%,-0%
C23	Mylar	0.1mfd±20%
C24	Electrolytic Tubular	10mfd 15WV
C25	Electrolytic Tubular	1mfd 25WV
C26~28	Electrolytic Tubular	10mfd 15WV
CT1	Cylinder TRIMMER	20mmfd~40mmfd

● RESISTORS

Symbol No.	Description	
R1	Composition	270K±10% 1/2W
R2	Composition	220K±10% 1/2W
R3	Composition	4.7K±10% 1/2W
R4	Composition	22K±10% 1/2W
R5	Composition	1.8K±10% 1/2W
R6	Composition	180 ohm±10% 1/2W
R7	Composition	10K±10% 1/2W
R8	Composition	22K±10% 1/2W
R9	Composition	3.3K±10% 1/2W
R10	Composition	220 ohm±10% 1/2W
R11~14	Composition	22K±5% 1/2W
R15,16	Composition	56K±5% 1/2W
R19	Composition	15K±10% 1/2W
R20	Composition	10K±10% 1/2W
R21	Composition	470K±10% 1/2W
R22	Composition	6.8K±10% 1/2W
R23	Composition	470 ohm±10% 1/2W
R24	Composition	1M±10% 1/2W
R25,26	Composition	100K±10% 1/2W
R27	Composition	15K±10% 1/2W
R28	Composition	220 ohm±10% 1/2W
R29	Composition	4.7K±10% 1/2W
R30,31	Composition	33K±5% 1/2W
R32	Composition	4.7K±10% 1/2W
R33~36	Composition	220K±10% 1/2W

● POTENTIOMETER

Symbol No.	Description	Part No.
VR1	50K(B) Level Set	R10-56

● COILS

Symbol No.	Description	Part No.
L1	19kHz Tune Coil 10mH	L17-04
L2	19kHz Tune Coil 10mH	L17-05
L3	38kHz Tune Coil	L17-43
L4	Filter Coil 10mH	L17-44
L5	Filter Coil 39mH	L17-29
L6	19kHz Tune Coil 100mH	L17-23

● TRANSISTORS/DIODES

Symbol No.	Description	
Q1	2SC281B	Composite Amp.
Q2	2SC281B	19kHz Amp.
Q3	2SC281B	38kHz Amp.
Q4	2SC281B	19kHz Beacon Signal Amp.
Q5	2SC281B	DC Amp.
Q6	2SB54	DC Amp.
Q7	2SC281B	Switching
D1,2	1N60	Doubler
D3~6	1N60	MPX Det.
D7	1N60	Noise Cancel
D8	1N60	MPX Det.

www.hifiengine.com

PARTS DESCRIPTION LIST

Symbol No.	Description	
D9	1N60	Switching
TH1	SDT-1000	Stabilizer

PRE AMP(UA13241B) SECTION

● CAPACITORS

Symbol No.	Description	
C1	Electrolytic Tubular	100mfd 6WV
C2,3	Aluminum Solid Electrolytic	3.3mfd 10WV
C4,5	Electrolytic Tubular	10mfd 15WV
C6,7	Mylar	0.0056mfd±20%
C8,9	Mylar	0.0033mfd±20%
C10,11	Mylar	0.01mfd±20%
C12,13	Ceramic	100mmfd±10%
C14,15	Electrolytic Tubular	50mfd 3WV
C16,17	Electrolytic Tubular	5mfd 15WV
C18,19	Electrolytic Tubular	50mfd 25WV
C20~23	Electrolytic Tubular	10mfd 15WV
C24	Ceramic	0.005mfd±20%
C25	Electrolytic Tubular	100mfd 3WV
C26,27	Ceramic	1000mmfd±10%
C30,31	Ceramic	560mmfd±20%

● RESISTORS

Symbol No.	Description	
R1,2	Composition	2.2K±10% 1/2W
R3,4	Composition	220K±10% 1/2W
R5	Composition	3.9K±10% 1/2W
R6	Composition	10K±10% 1/2W
R7,8	Composition	15K±10% 1/4W
R9,10	Composition	470 ohm±10% 1/2W
R11,12	Composition	7.5K±5% 1/4W
R13,14	Composition	24K±5% 1/4W
R15,16	Composition	750K±5% 1/2W
R17,18	Composition	560K±10% 1/4W
R19,20	Composition	5.6K±10% 1/2W
R21,22	Composition	820 ohm±20% 1/2W
R23,24	Composition	1M±10% 1/2W
R25,26	Composition	47K±10% 1/2W
R27,28	Composition	470 ohm±10% 1/2W
R29,30	Composition	5.6K±10% 1/4W
R31,32	Composition	100 ohm±10% 1/2W
R33,34	Composition	390K±10% 1/4W
R35,36	Composition	10K±10% 1/2W

● POTENTIOMETER

Symbol No.	Description	Part No.
VR1	5K(B) Separation Control	R10-53

● TRANSISTORS

Symbol No.	Description	
Q1,2	2SC350(R) or (O)	Phono E.Q. AF Amp.
Q3,4	2SC350(Y)	Phono E.Q. AF Amp.
Q5	2SC350(G)	Channel L AF Amp.
Q6	2SC350(G)	Channel R AF Amp.

MAIN AMP (821) SECTION

● CAPACITORS

Symbol No.	Description	
C1	Electrolytic Tubular	10mfd 12WV
C2,3	Electrolytic Tubular	1mfd 25WV
C4	Ceramic	100mmfd±10%
C5	Electrolytic Tubular	50mfd 25WV
C6	Ceramic	250mmfd±10%
C7	Electrolytic Tubular	10mfd 12WV
C8,9	Electrolytic Tubular	1mfd 25WV
C10	Ceramic	100mmfd±10%
C11	Electrolytic Tubular	50mfd 25WV
C12	Ceramic	250mmfd±10%
C13,14	Electrolytic Tubular	100mfd 3WV
C15	Electrolytic Tubular	50mfd 25WV

www.hifiengine.com

PARTS DESCRIPTION LIST

Symbol No.	Description	
C16,17	Electrolytic Tubular	100mfd 6WV
C18,19	Ceramic	100mmfd±10%
C20,21	Electrolytic Tubular	50mfd 6WV

● RESISTORS

Symbol No.	Description	
R1	Composition	100K±5% 1/4W
R2	Composition	22K±5% 1/4W
R3	Composition	5.6K±5% 1/2W
R4	Composition	100 ohm±5% 1/2W
R5	Composition	180K±5% 1/2W
R8	Composition	4.7K±5% 1/2W
R9	Composition	100 ohm±5% 1/2W
R10	Composition	10K±5% 1/2W
R11	Composition	2.2K±5% 1/2W
R12	Composition	330 ohm±5% 1/2W
R13	Composition	33 ohm±5% 1/2W
R14	Composition	330 ohm±5% 1/2W
R15	Composition	100K±5% 1/4W
R16	Composition	22K±5% 1/4W
R17	Composition	5.6K±5% 1/2W
R18	Composition	100 ohm±5% 1/2W
R19	Composition	180K±5% 1/2W
R22	Composition	4.7K±5% 1/2W
R23	Composition	100 ohm±5% 1/2W
R24	Composition	10K±5% 1/2W
R25	Composition	2.2K±5% 1/2W
R26	Composition	330 ohm±5% 1/2W
R27	Composition	33 ohm±5% 1/2W
R28	Composition	330 ohm±5% 1/2W
R29	Composition	100K±5% 1/2W
R30	Composition	3.3K±5% 1/2W
R31	Composition	1K±5% 1/2W
R32,33	Composition	2.2K±5% 1/2W
R34	Composition	33 ohm±5% 1/2W
R35	Composition	3.3K±5% 1/2W

● POTENTIOMETERS

Symbol No.	Description		Part No.
VR1,2	30K(B)	DC Bias	R10-55
VR3,4	10K(B)	Protection Level Set	R10-54
VR5,6	500 ohm(B)	DC Bias	R10-46

● TRANSISTORS/DIODES

Symbol No.	Description	
Q1	2SC350(G)	Channel L AF Amp.
Q2	2SC317	Channel L Driver
Q3	2SC317(R)	Complementary
Q4	2SB89A	Complementary
Q5	2SC317(R)	Complementary
Q6	2SB89A	Complementary
Q7	2SC317	Channel R Driver
Q8	2SC350(G)	Channel R AF Amp.
Q9	2SC281B	Protection
D1,2	1N60	Rect.
D4,6	FR1Sx2	Stabilizer
D5,7	FR1Sx2	Stabilizer
TH1,2	SDT-65	Thermistor

MAIN CHASSIS (AB113) SECTION

● CAPACITORS

Symbol No.	Description	
C1,2	Mylar	0.1mfd±20%
C3,4	Ceramic	1000mmfd±20%
C5,6	Mylar	0.22mfd±20%
C7,8	Mylar	0.022mfd±20%
C9,10	Mylar	0.0033mfd±20%
C11~14	Mylar	0.033mfd±20%
C15,16	Mylar	0.0047mfd±20%
C17,18	Electrolytic Block	1000mfd 35WV
C19,20	Mylar	0.1mfd±20%
C21	Electrolytic Tubular	100mfd 25WV
C22	Electrolytic Block	1000mfd 35WV
C23	Electrolytic Block	1000mfd 50WV
C24	Electrolytic Tubular	200mfd 15WV
C25	Electrolytic Tubular	100mfd 15WV
C26	Electrolytic Tubular	500mfd 25WV
C27,28	Paper Tubular	0.02mfd±20%
C29	Paper Tubular	0.01mfd±20%
C30	Electrolytic Tubular	1000mfd 15WV

www.hifiengine.com

PARTS DESCRIPTION LIST

Symbol No.	Description	Part No.
C32,33	Ceramic	750mmfd±20%
C34	Ceramic	560mmfd±20%
C35,36	Ceramic	1500mmfd±20%
C37	Ceramic	560mmfd±20%
C38	Ceramic	2mmfd±0.5mmfd

● RESISTORS

Symbol No.	Description	
R5,6	Composition	15K±10% 1/2W
R7,8	Composition	3.3K±10% 1/2W
R9,10	Composition	5.6K±10% 1/2W
R11,12	Composition	150K±10% 1/2W
R13,14	Composition	1.5K±10% 1/2W
R15,16	Composition	6.8K±10% 1/2W
R17~20	Wire Wound	0.47 ohm±10% 1W
R21,22	Composition	4.7 ohm±10% 1W
R23	Composition	56 ohm±10% 1/2W
R24,25	Composition	1K±10% 1/2W
R26,27	Composition	330 ohm±10% 1/2W
R28	Composition	220 ohm±10% 1/2W
R29	Wire Wound	1K±5% 2W
R30	Composition	2.2K±10% 1/2W
R31	Composition	1.5K±10% 1/2W
R32	Wire Wound	300 ohm±5% 6W
R33	Wire Wound	420 ohm±5% 4W
R34	Composition	150 ohm±10% 1/2W
R40,41	Composition	15K±10% 1/2W
R42	Composition	33K±10% 1/2W
R43,44	Composition	15K±10% 1/2W
R45	Composition	33K±10% 1/2W
R46,47	Composition	10 ohm±10% 1/2W

● POTENTIOMETERS

Symbol No.	Description	Part No.
VR1	50K(T2-26) VOLUME	R04-2208
VR3	50K(A) BASS	R02-0138
VR4	50K(A) TREBLE	R02-0138

● TRANSISTORS/DIODES

Symbol No.	Description
Q1	2SC669 Regulator
Q2~5	2SC245(1) (or 2SC494(Y), 2SC664) Power Amp.
D1	1S338-T Rectifier
D2,3	DS1M Rectifier
D4	SW - 0.5S P.L DC Bias

● SWITCHES

Symbol No.	Description	Part No.
S1	SELECTOR Rotary Y-5.14.5	S07-119
S2	TAPE MONITOR/ MODE Y-2.4.6	S03-634
S3	LOUDNESS	S10-22N
S4	LOW FILTER	S10-22N
S5	HIGH FILTER	S10-22N
S6	OUTPUT Y-1.3.5	S03-253
S7	MUTING	S10-22N

● MISCELLANEOUS

Symbol No.	Description	Part No.
-	Case	A01-AA01
-	Chassis	A03-AB113
-	Panel	A05-AB11
-	Dial Scale	A07-AB113
-	Jewel Red	A53-201
VC	Variable Capacitor FM 4 Gang, AM 2 Gang	D01-120
-	Dial Spring	D06-02
-	Dial Strings	D07-01
-	Dial Shaft	D08-87
-	Dial Pointer	D12-55
-	AC Consent	E02-06
-	P.L Socket	E03-02F
-	Consent 4P	E07-340
J	Pin Jack 2P	E08-12C
J	Pin Jack 3P	E08-13B
J	Pin Jack 1P	E08-110
-	Pin Plug	E09-410
J	US Jack	E16-13
-	Knob VOLUME, BASS,TREBLE	S14-259
-	Knob TUNING	S14-330
-	Knob VOLUME, BASS,TREBLE	S14-807
-	Knob OUTPUT, SELECTOR,TAPE MONITOR/MODE	S14-808
-	Fuse Folder	S15-09
-	Fuse Folder	S15-03B
P.L1,2	Pilot Lamp	S16-06
P.L3	Pilot Lamp	S16-12
P.L4	Pilot Lamp	S16-19
F	Fuse 2A	S17-02
P.T	Power Transformer	T01-156A
M	TUNING Meter	T11-57

www.hifiengine.com

CHASSIS TOP VIEW

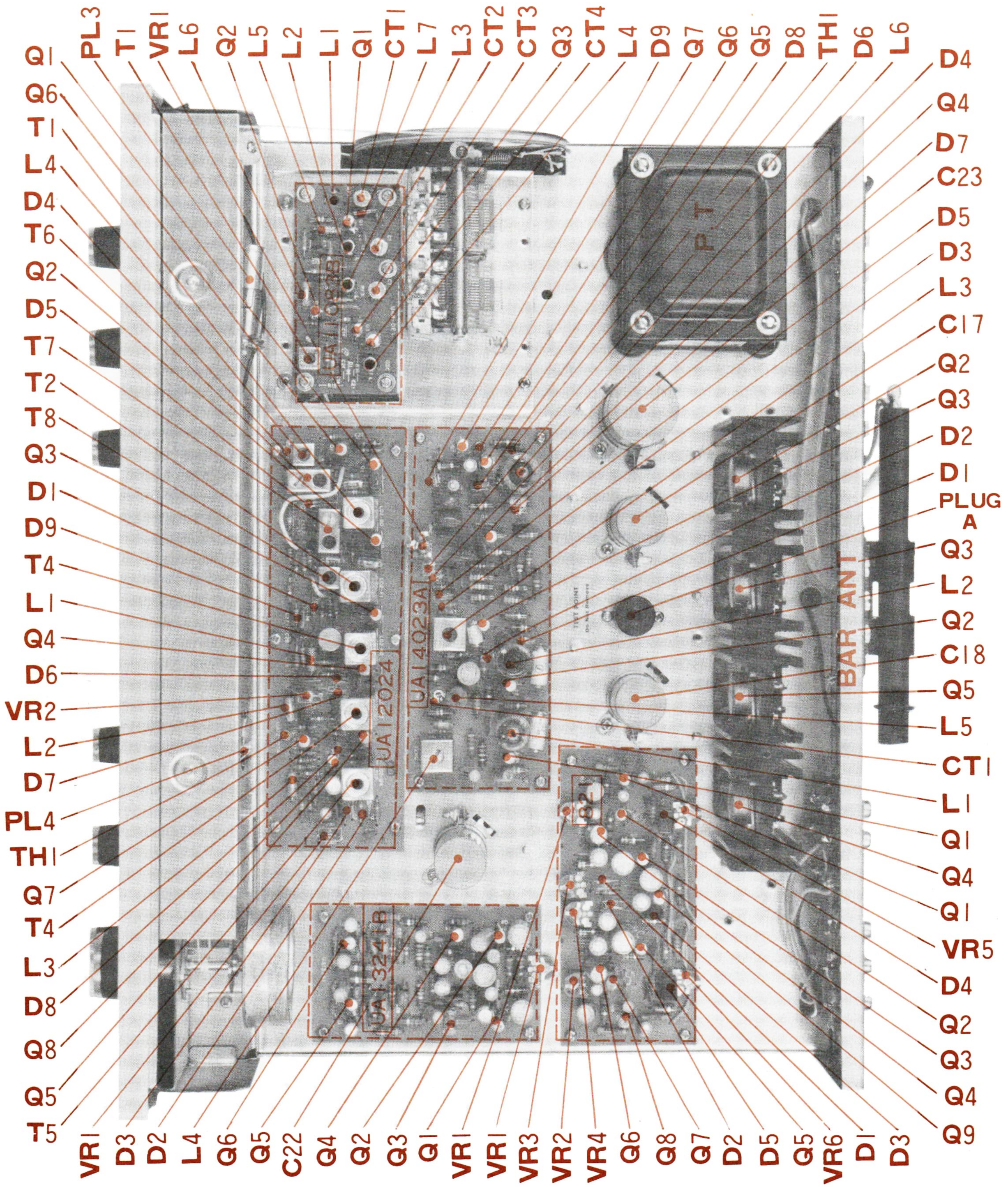

CHASSIS BOTTOM VIEW

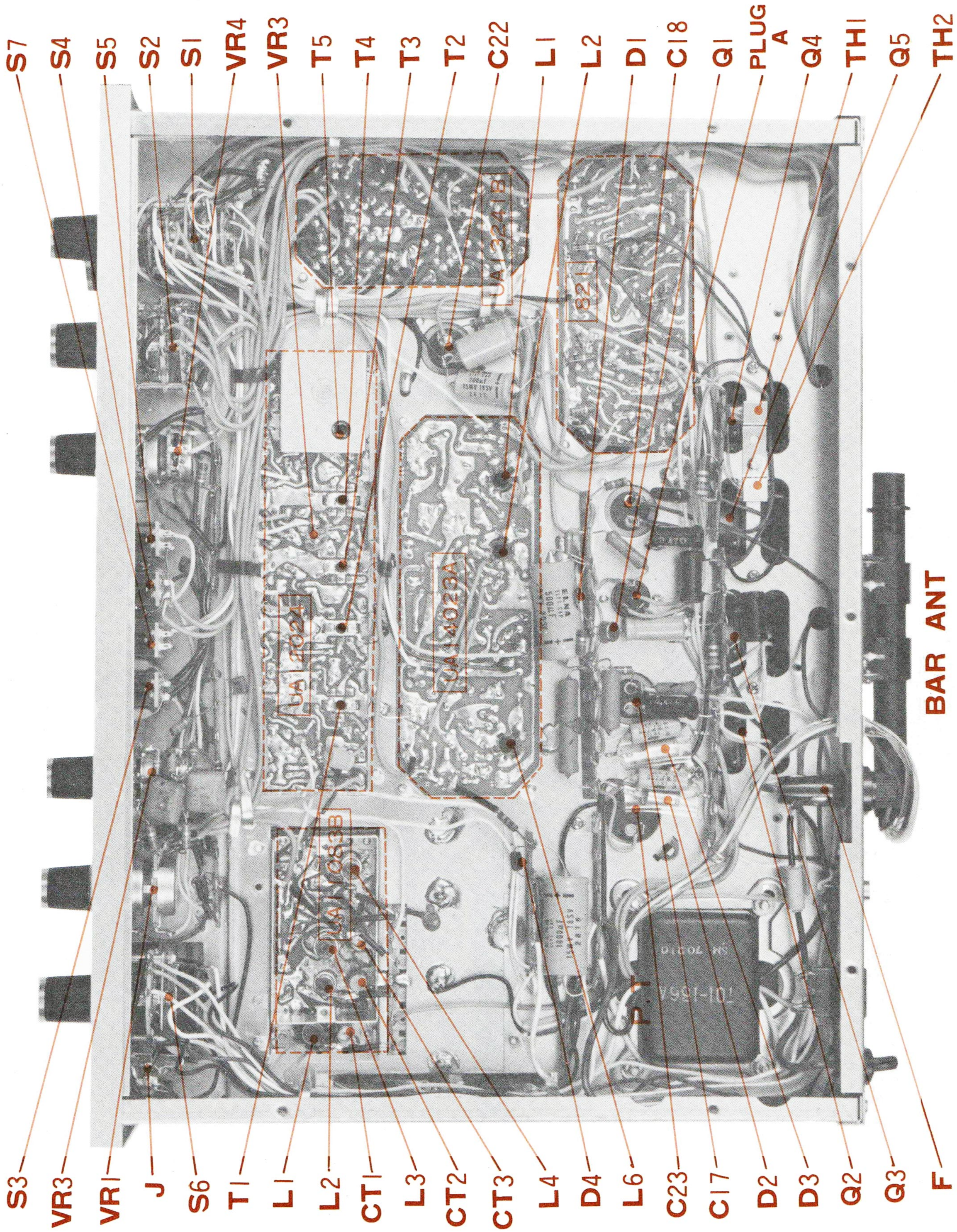

BAR ANT

SEALED CIRCUIT ASSEMBLIES - PHONTOM VIEWS

RF (UA11083B) Section

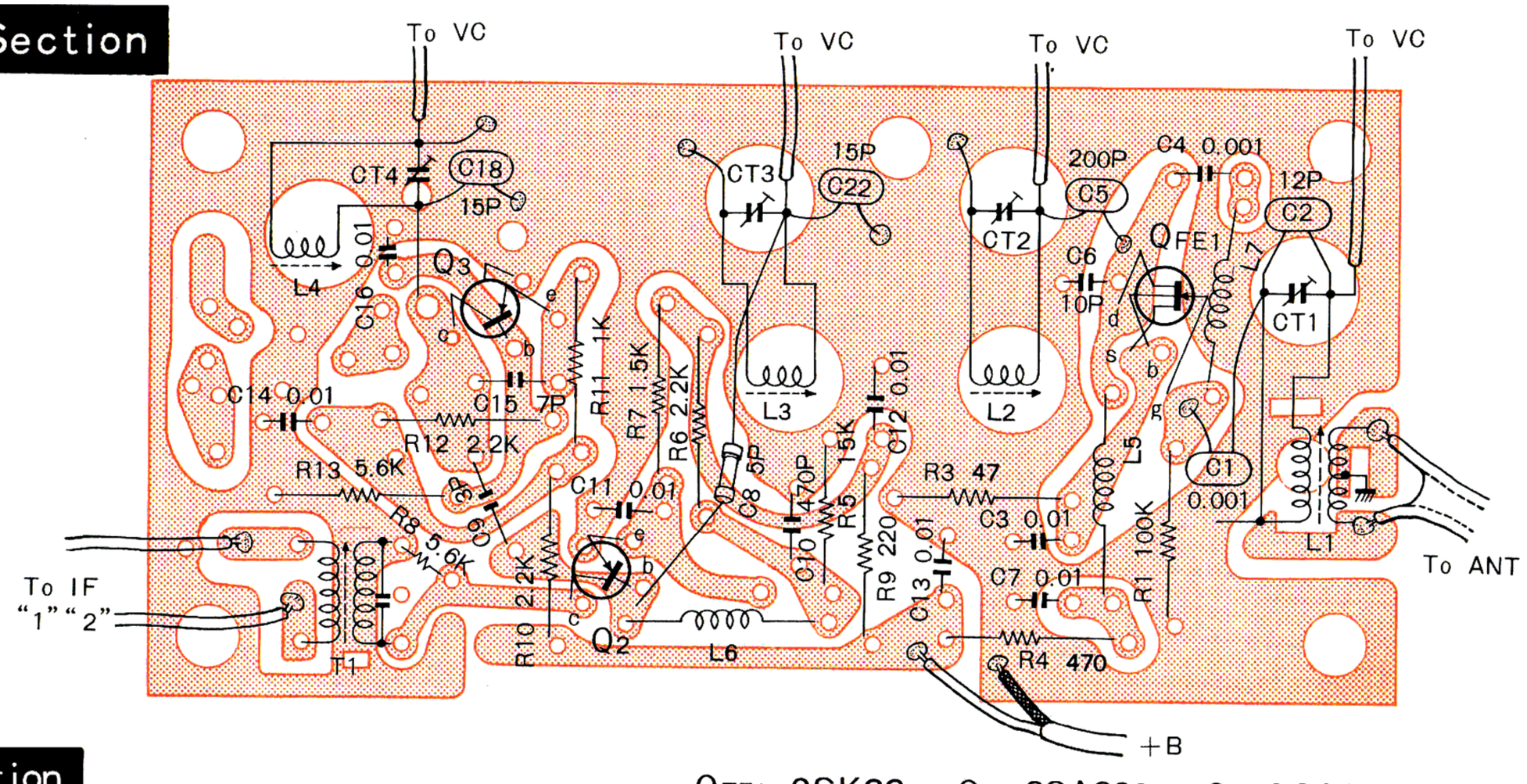

IF (UA12024) Section

Q_{FE1} 3SK22 Q_2 2SA239 Q_3 2SA240

$Q_{1\sim5}$ 2SA234B Q_6 2SA354B Q_7 2SC281B Q_8 2SB54 $D_{1\sim9}$ IN60 TH_1 SDT—1000

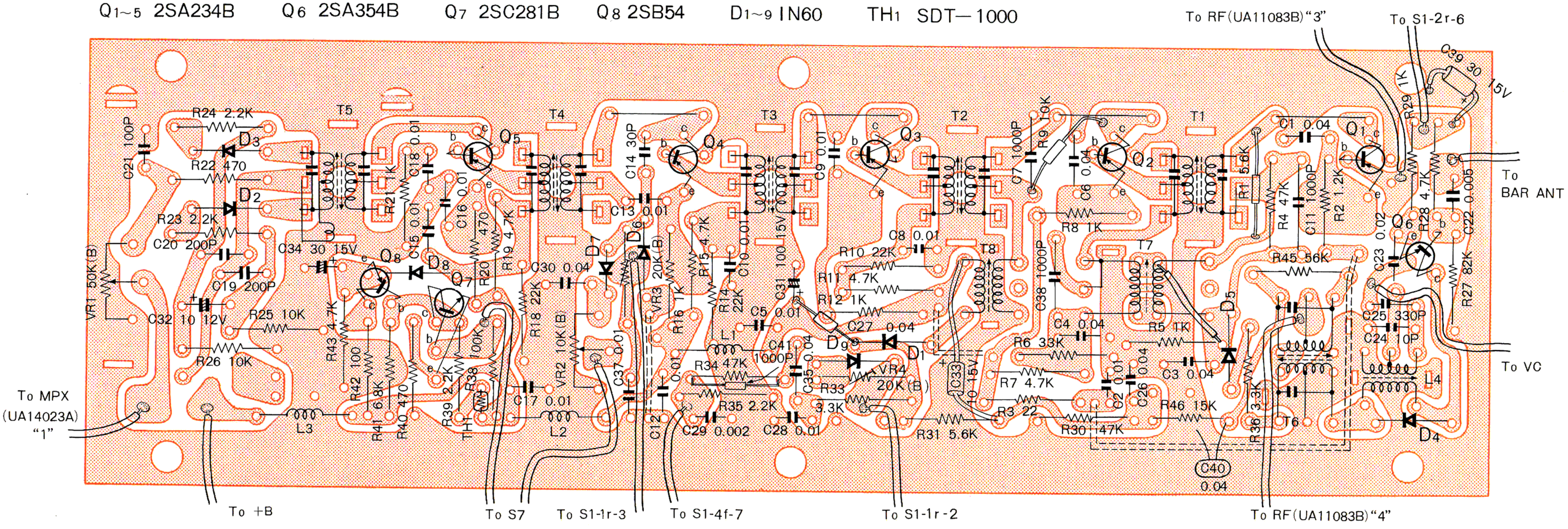

www.hiffiengine.com

MPX (UA14023A) Section

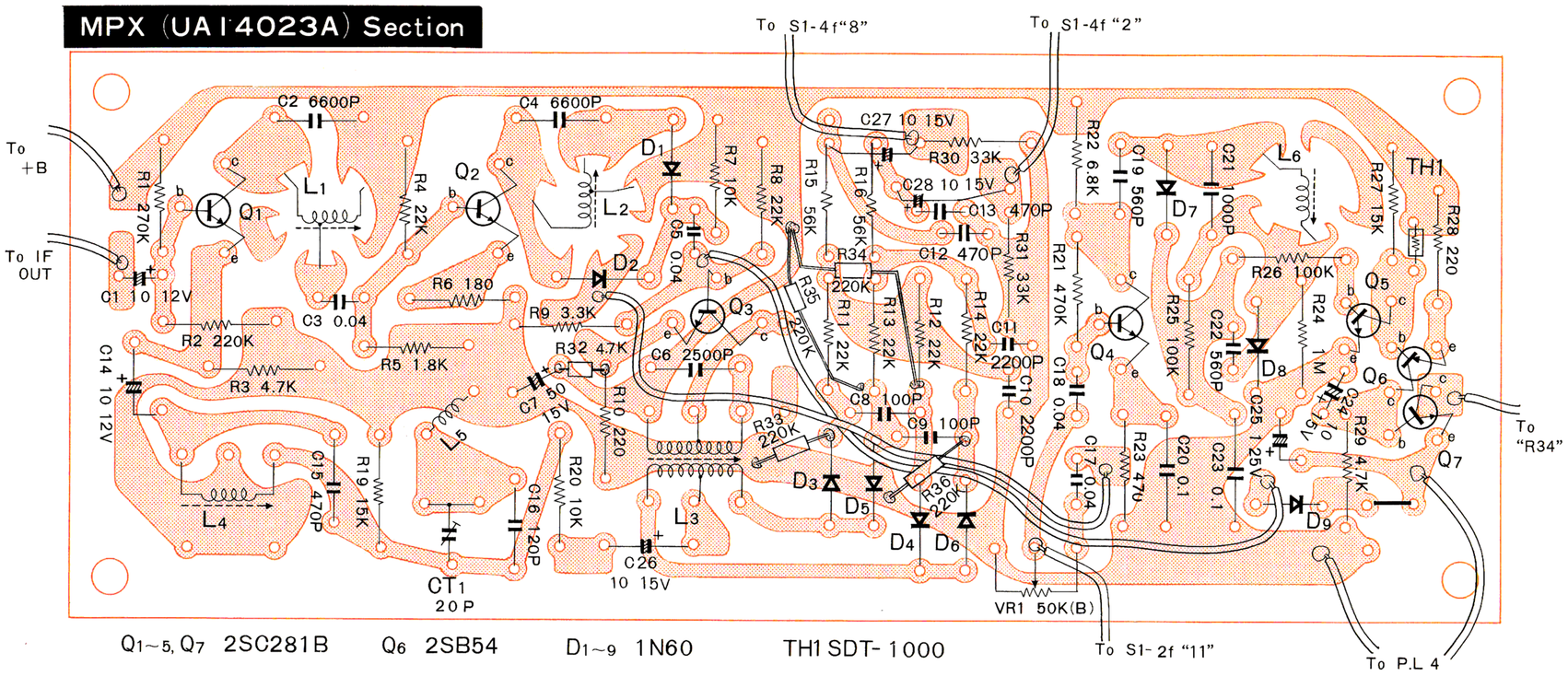

PRE AMP (UA13241B) Section

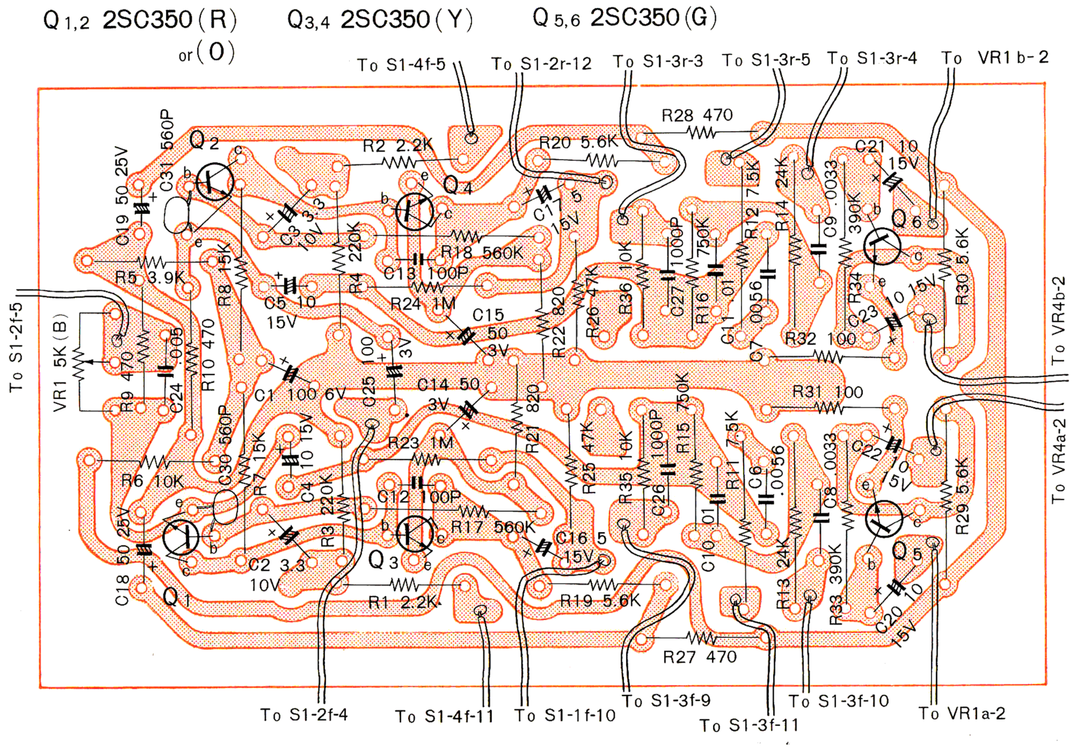

MAIN AMP (821) Section

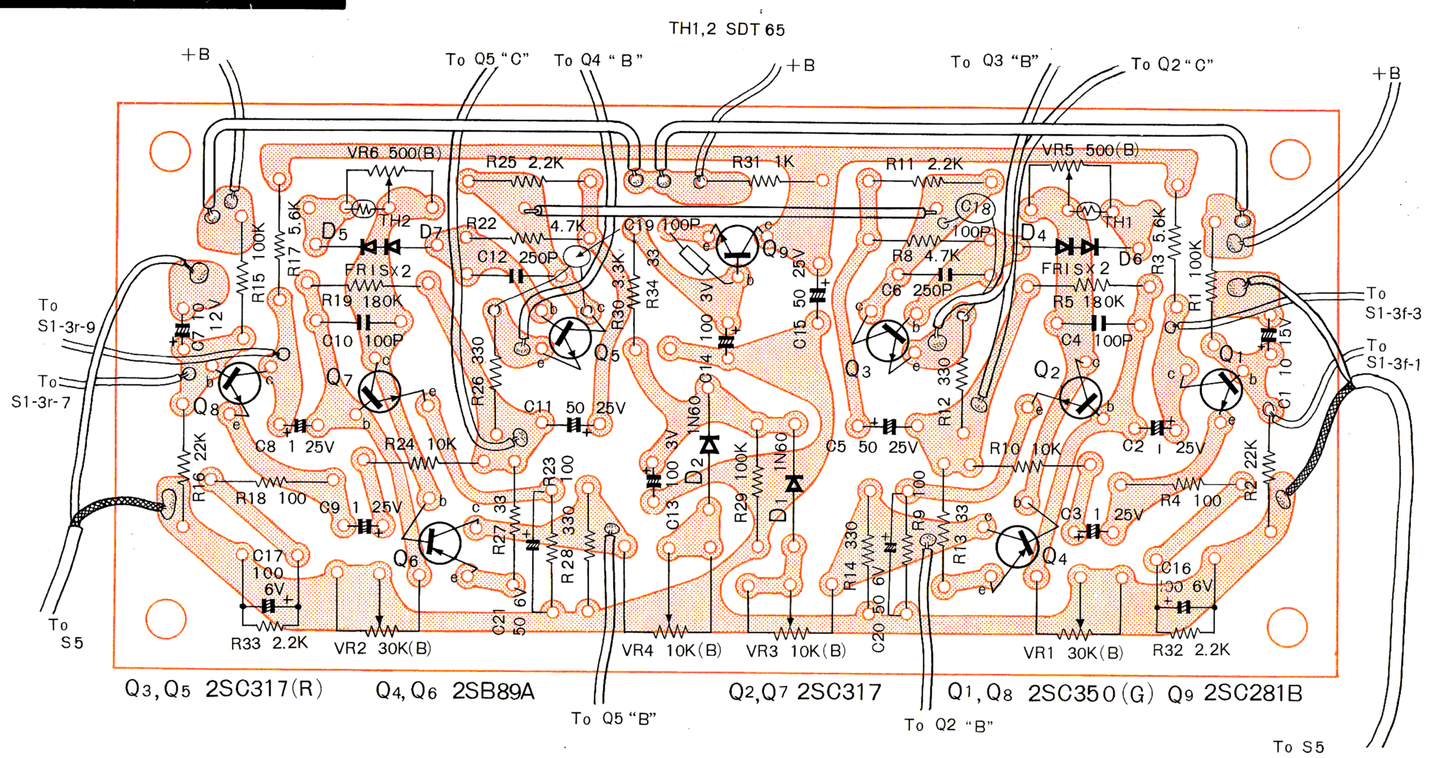

SCHEMATIC DIAGRAM

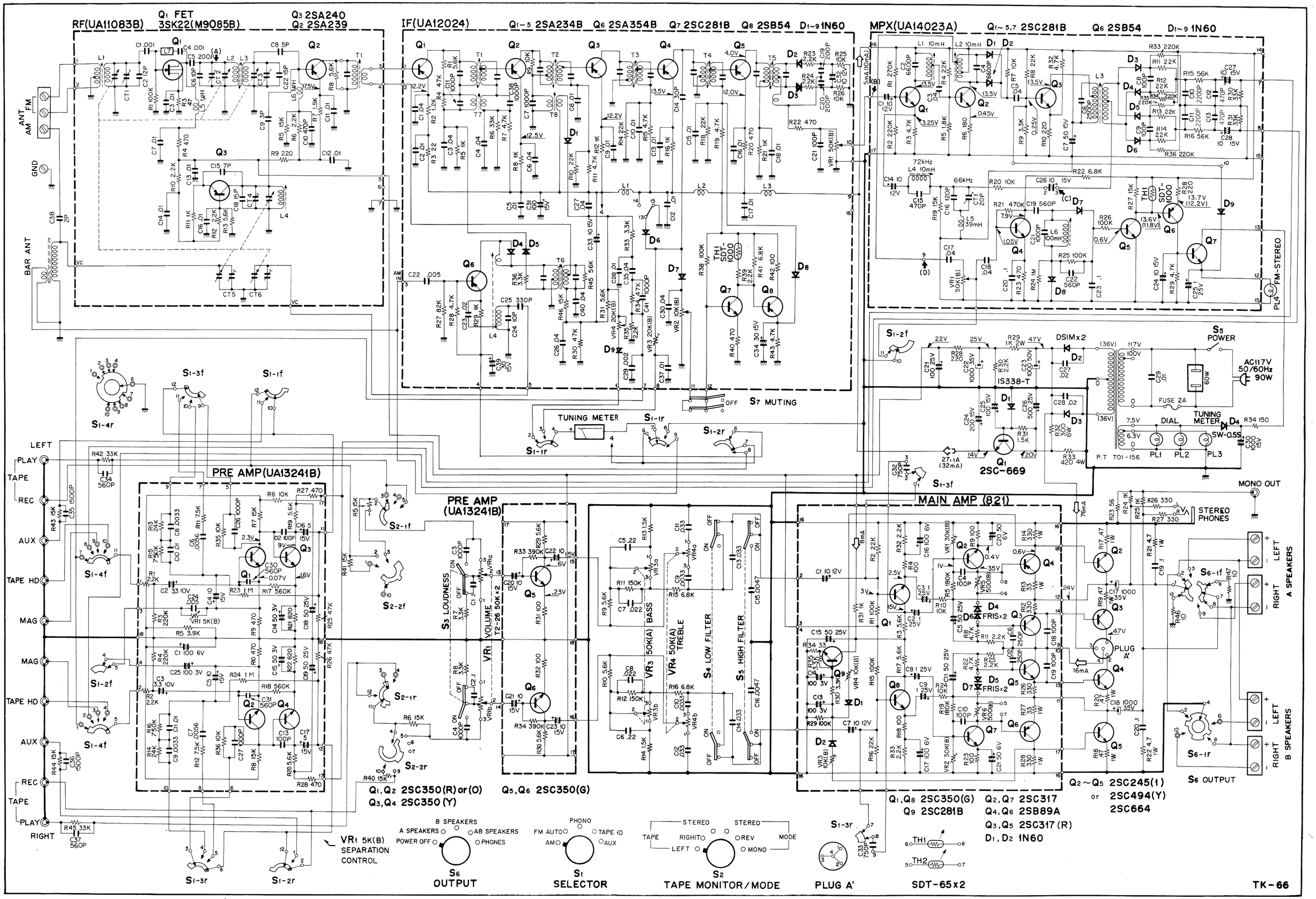

REMOVALS DISASSEMBLE

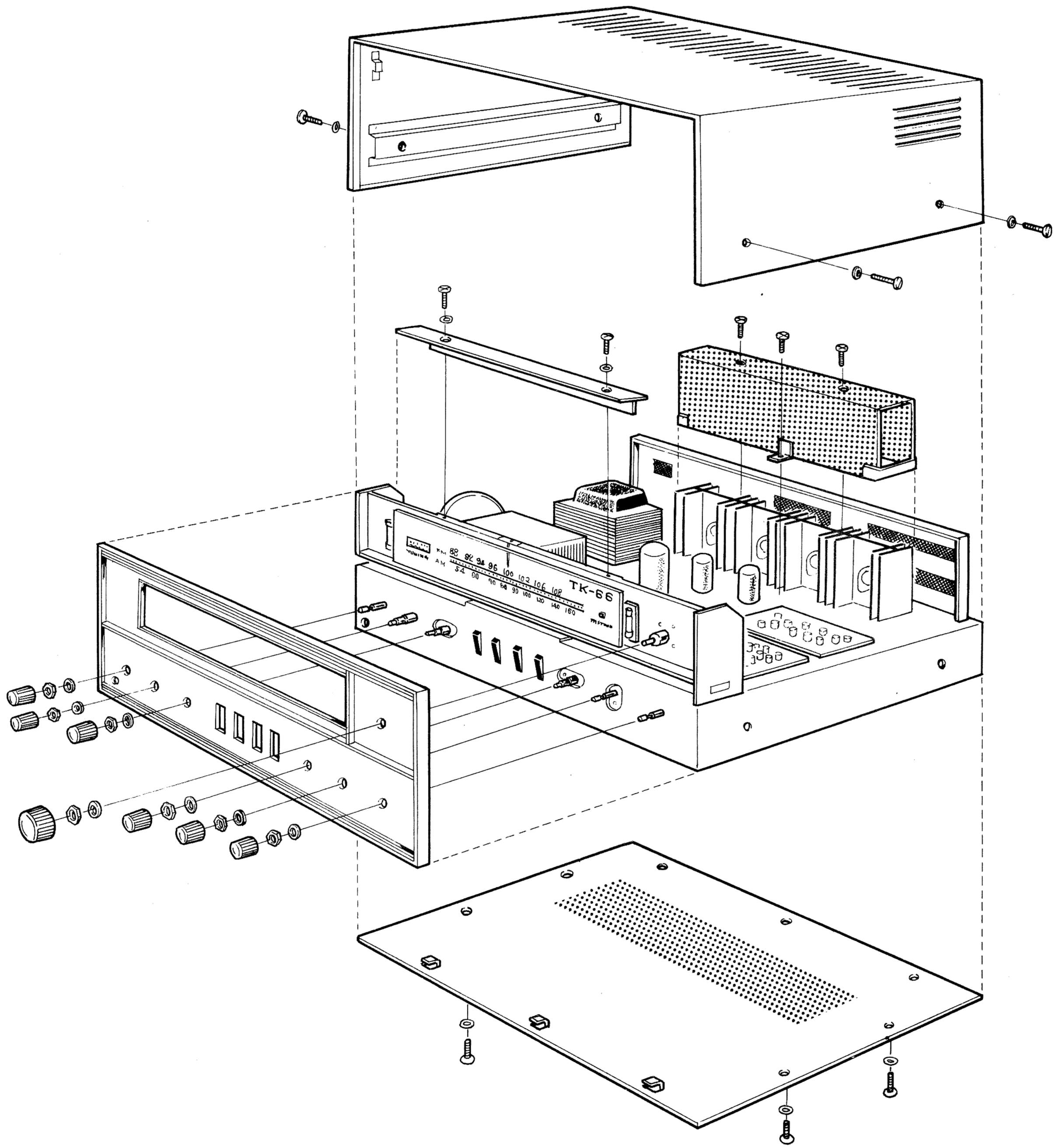

www.hifiengine.com

ALIGNMENT PROCEDURE

Please read the following notes carefully before making any alignment adjustment.

1. Generator signal : Always work with the minimum generator signal sufficient to produce a satisfactory output indication.
2. Alignment tool : IF transformers require a plastic screwdriver-type alignment tool.
3. Dial pointer : Check pointer for alignment at left hand start mark.

1. FM Section "UA11083B" "UA12024"

Instruments : FM signal generator, AC VTVM & Oscilloscope.

STEP	Dummy Antenna	Signal Generator Coupling	Signal Generator Frequency	Selector Switch	Tuning Dial Setting	Indicating Meter	Adjust	Remarks
1	Direct	FM Antenna terminal	10.7 MHz (Unmod.)	FM	Any non-interfering Setting	Tuning Indicator	"UA11083B" T1 "UA12024" T1~4 Top & Bottom	Maximum Deflection
2	300 ohm Carbon Resistor	FM Antenna terminal	98 MHz 400Hz±75kHz FM 500 ~1000μV	FM	Tune for maximum,using tuning indicator	VTVM at LEFT output jack of TAPE REC	"UA12024" T5 Top & Bottom	Maximum Deflection
3	300 ohm Carbon Resistor	FM Antenna terminal	90 MHz 400 Hz ±75kHz FM	FM	90 MHz	VTVM & Xtal earphone at LEFT output jack of TAPE REC	"UA11083B" L1 ~ L4	Maximum Deflection
4	300 ohm Carbon Resistor	FM Antenna terminal	106 MHz 400 Hz ±75kHz FM	FM	106 MHz	VTVM & Xtal earphone at LEFT output jack of TAPE REC	"UA11083B" CT1 ~ 4	Maximum Deflection
5	Repeat steps 3 & 4 until no further improvement is possible.							
6	300 ohm Carbon Resistor	FM Antenna terminal	98 MHz 400Hz±75kHz FM 1000μV	FM	Tune for maximum,using tuning indicator	VTVM & Xtal earphone at LEFT output jack of TAPE REC	"UA12024" VR1	Set the output level to 1.5V

Confirm the presence of 400 Hz signal with crystal earphone.

www.hifiengine.com

2. AM Alignment, "UA11083B" "UA12024"

Instruments : AM signal generator, AC VTVM & Oscilloscope.

STEP	Dummy Antenna	Signal Generator Coupling	Signal Generator Frequency	Selector Switch	Tuning Dial Setting	Indicating Meter	Adjust	Remarks
1	Direct	High side to AM antenna terminal Low side to chassis	455kHz (400 Hz 30% AM)	AM	Any non-interfering setting	Tuning indicator	"UA12024" T6 ~ 8	Maximum Deflection
2		Connect to short loop of wire, Radiate signal into ferrite loop stick antenna of receiver	600kHz (400 Hz 30% AM)	AM	600kHz	Tuning Indicator	"UA12024" L4& Bar Antenna ring	Maximum Deflection
3		Connect to short loop of wire, Radiate signal into ferrite loop stick antenna of receiver	1400kHz (400 Hz30% AM)	AM	1400kHz	Tuning Indicator	"UA11083B" CT5,6	Maximum Deflection
4	Repeat steps 2 & 3 until no further improvement is possible.							

3. MPX Section "UA14023A"

(a) SCA Filter

Instruments : Audio signal generator & AC VTVM.
Selector switch: "FM" position.

STEP	Audio Signal Generator Coupling	Audio Signal Generator Frequency	VTVM & Oscilloscope Coupling	Adjust	Remarks
1	High side to (B) Low side to chassis	72kHz (0.5V)	High side to (C) Low side to chassis	"UA14023A" L4	Minimum deflection
2	High side to (B) Low side to chassis	66kHz (0.5V)	High side to (C) Low side to chassis	"UA14023A" CT1	Minimum deflection

Refer to MPX block "UA14023A" in fig. for test point.

www.hifiengine.com

(b) MPX

Instruments : FM Stereo generator, Audio signal generator, AC VTVM & Oscilloscope.

STEP	FM Stereo Generator				Selector Switch	VTVM & Oscilloscope Connection	Adjust	Remarks
	Coupling	Modulation Frequency	Input Selector	19kHz Pilot Carrier Switch				
1	FM Antenna terminal	OFF	OFF	ON	FM STEREO	High side to (D) Low side to chassis	"UA14023A" L1, L2	Maximum deflection
2	FM Antenna terminal	400 Hz	A-B or REVERSE	ON	FM STEREO	LEFT or RIGHT output jack of TAPE REC	"UA14023A" L2, L3	To obtain a wave form with maximum amplitude and minimum distortion at 400 Hz on oscil-loscope
3	FM Antenna terminal	2000 Hz	A or LEFT	ON	FM STEREO	RIGHT output	"UA13241B" VR1	Minimum deflection
4	FM Antenna terminal	2000 Hz	B or RIGHT	ON	FM STEREO	LEFT output	"UA13241B" VR1	Minimum deflection
5	Repeat steps 3 & 4 until no further improvement is possible.							

www.hifiengine.com

PROCEDURE FOR REPLACING OUTPUT TRANSISTOR

Symptoms:

A. When the fuse has blown out on hum at speakers.

B. When there is no output at all.

C. When you cannot get rated output.

Replacing Method:

2SC245 (1) (NEC) Can be replaced by 2SC494(Y) (Toshiba), 2SC664 (Hitachi) and 2N1488 ~ 90, 2N3055, 2N3772 (RCA).

Adjusting Procedures:

Connect dummy load to 16 ohm output terminals, and connect to the oscilloscope input in parallel.

Set audio generator at 100mV 1000Hz and connect to the AUX terminals.

Advance the front panel volume control until the sine-wave just begins to clip on the oscilloscope.

Adjust DC balance control VR1 (LEFT) or VR2 (RIGHT) on the print board "821" until clipping is symmetrical.

Testing Procedures:

Until replacement is completed, do not operate the set the unit without first testing.

Perform the test according to the following procedures.

1. Using variable transformer, lower the AC line voltage to approximately 30 volts.

2. Using a tester, measure the voltage between the chassis and "c" of the power transistor Q4 or Q3. If a tester indicates approximately 47V, it is normal.

3. Also measure the voltage between the chassis and "c" of the power transistor Q5 or Q2. If a tester indicates approximately 24V, it is normal.

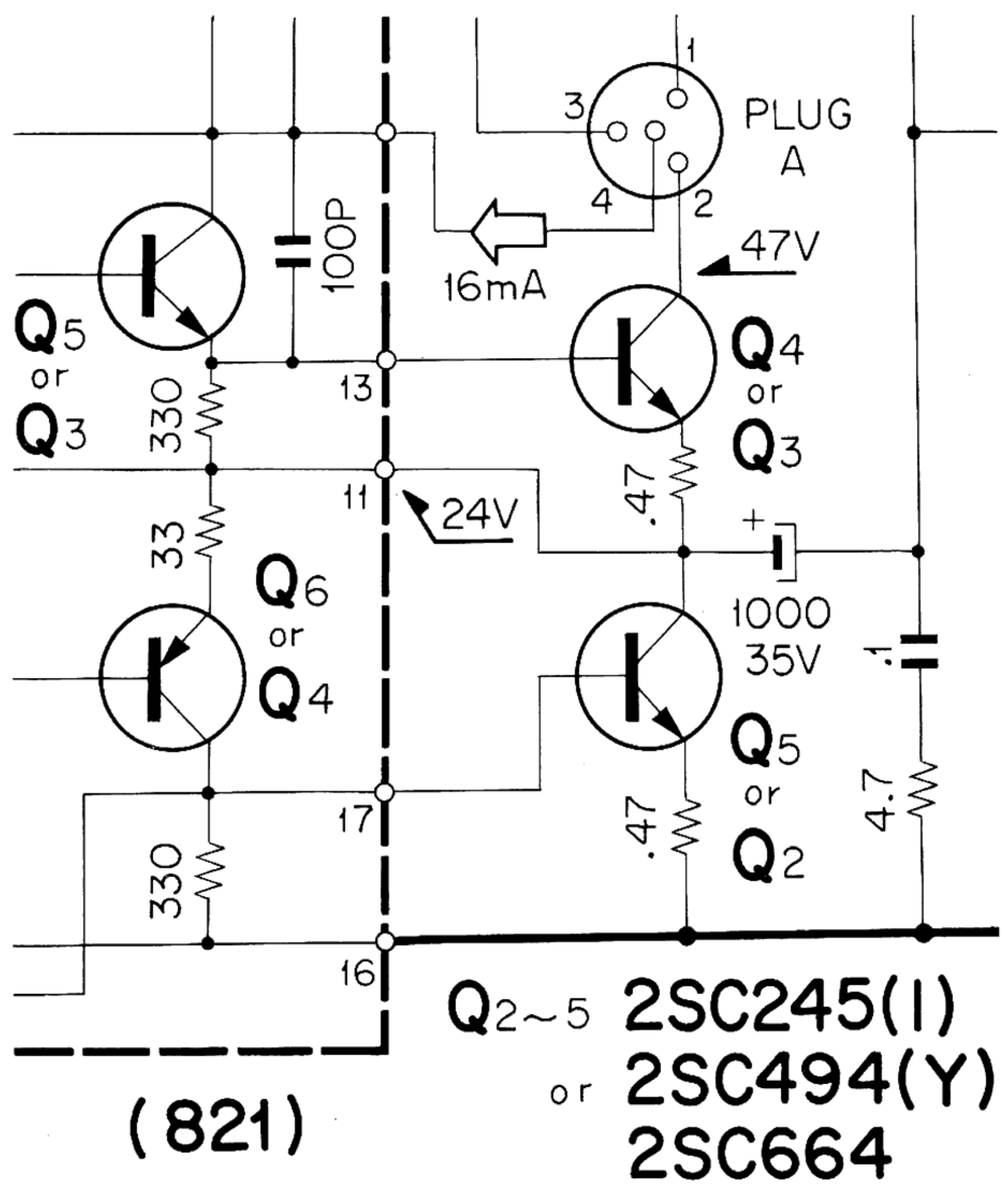

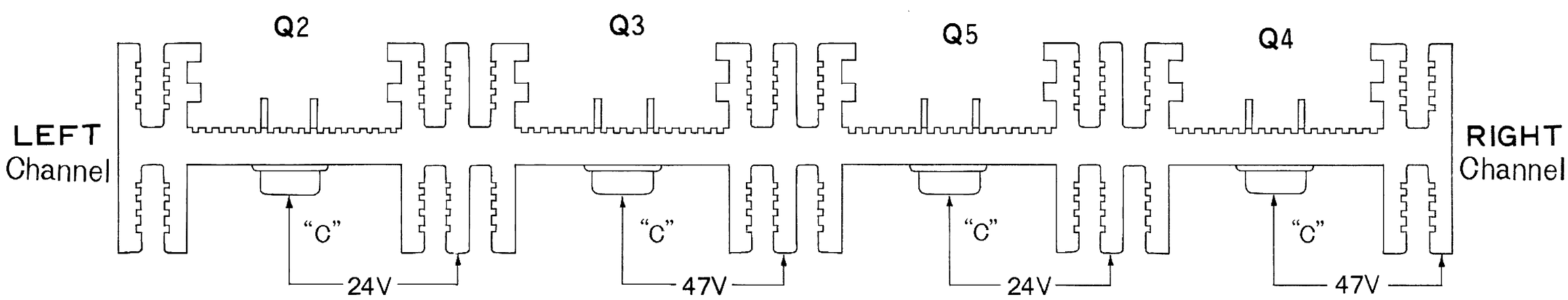

DIAL CORD STRINGING

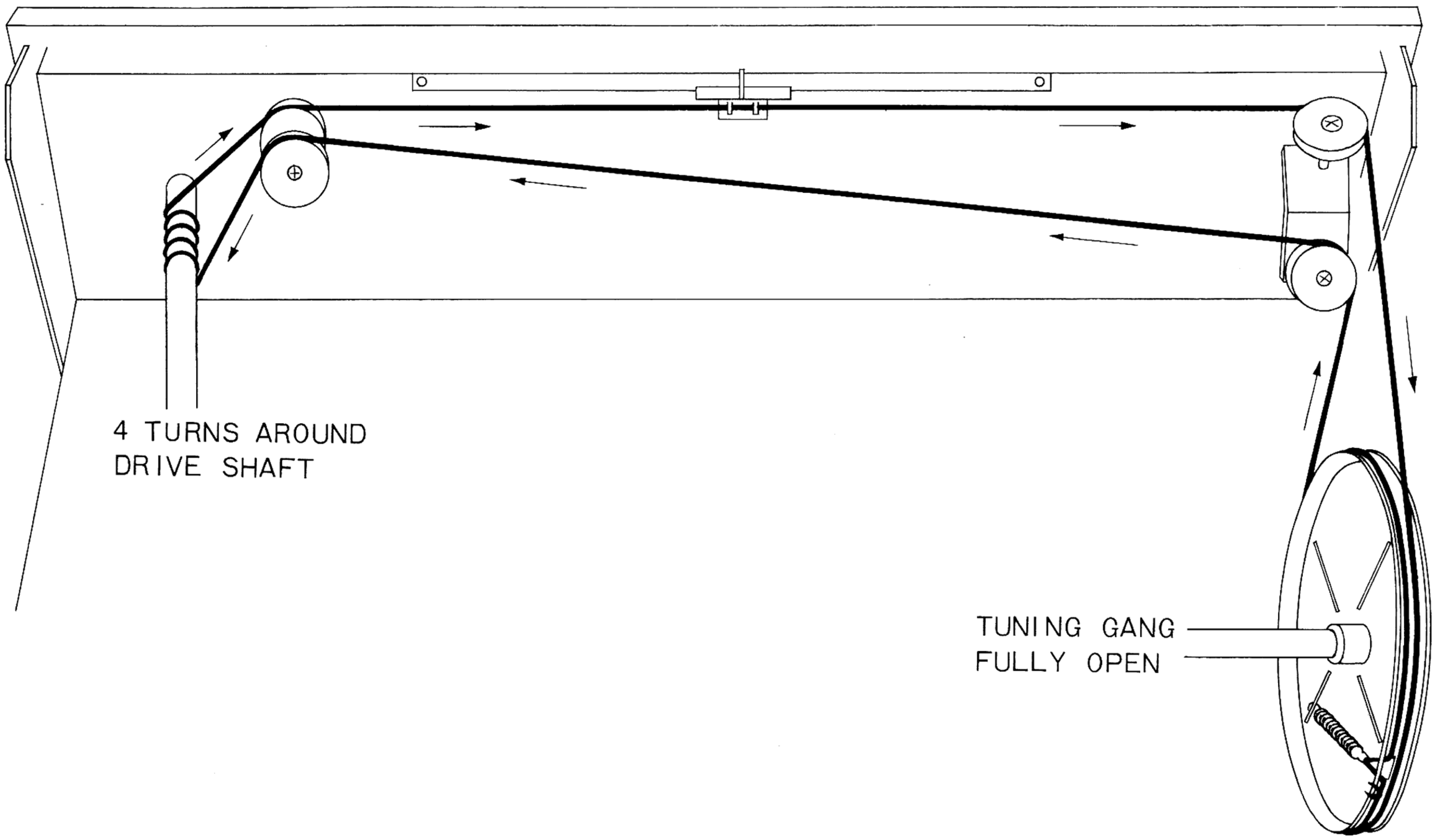

www.hifiengine.com

— NOTES —

www.hifiengine.com

KENWOOD ELECTRONICS, INC.

69-41 CALAMUS AVENUE
WOODSIDE NEW YORK, N.Y.

3700 SOUTH BROADWAY PLACE
LOS ANGELES, CALIFORNIA90007

© 1967 • 5 PRINTED IN JAPAN

www.hifiengine.com

KENWOOD

SOLID STATE AM-FM STEREO RECEIVER

TK-66

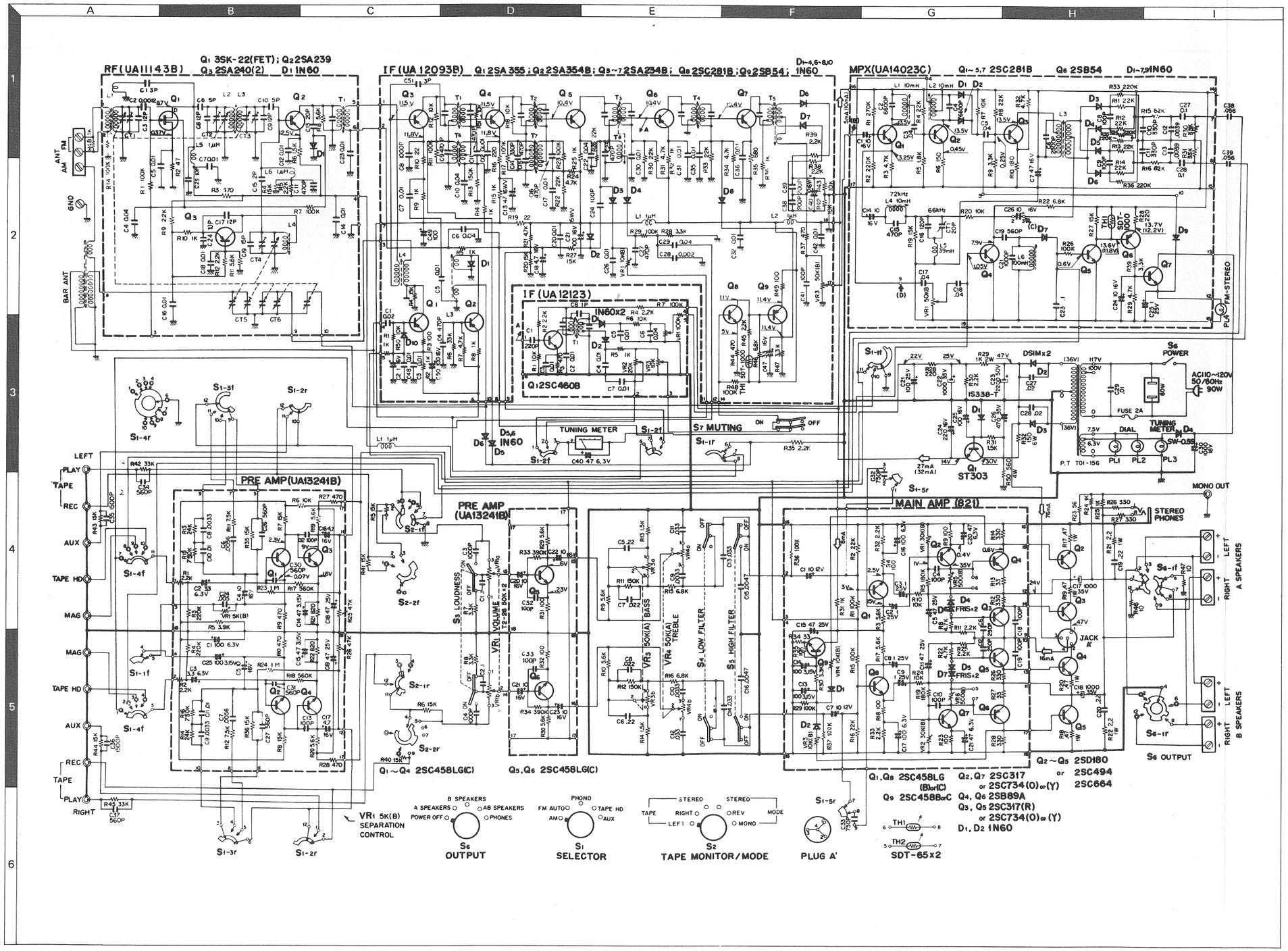

SPECIFICAITONS

AMPLIFIER SECTION

TOTAL MUSIC POWER: 60 watts (IHF Standard 4 ohms)
50 watts (IHF Standard 8 ohms)

CONTINUOUS POWER: 20 watts per channel (0.9% T.H.D.)

FREQUENCY RESPONSE: 20 Hz — 50,000 Hz (±1 dB)

POWER BANDWIDTH: 20 Hz — 30,000 Hz (– 3 dB)

SIGNAL TO NOISE RATIO: Phono – 60 dB, Tape HD – 60 dB, AUX – 70 dB.
(below rated output)

INPUT SENSITIVITY: MAG 2 mV, Tape HD 2.5 mV, AUX 150 mV,
Tape play 150 mV.

MAXIMUM INPUT SIGNAL: 100 mV P - P (1,000 Hz)
(Mag input) 560 mV P - P (10,000 Hz)

DAMPING FACTOR: 23 (at 8 ohms)

LOW FILTER: 80 Hz roll-off

HIGH FILTER: 6,000 Hz roll-off

BASS CONTROL: ±10 dB (at 50 Hz)

TREBLE CONTROL: ±10 dB (at 10,000 Hz)

VOLUME CONTROL TRACKING ERROR: Within 3 dB

CENTER CHANNEL OUTPUT: Yes

SPEAKER IMPEDANCE: 4, 8 or 16 ohms

TUNER SECTION

USABLE SENSITIVITY: FM; 2 microvolts (IHF Standard)
AM; 10 microvolts (IHF Standard)

FM FREQUENCY RESPONSE: 20 — 20,000 Hz ±2 dB

FM HARMONIC DISTORTION: 0.6% (1,000 Hz 100% mod.)

FM SIGNAL TO NOISE RATIO: 60 dB

FM CAPTURE RATIO: 2.5 dB

FM SELECTIVITY: 45 dB
(Alt. Channel)

FM STEREO SEPARATION: 38 dB (at 400 Hz)

FM IMAGE REJECTION: 60 dB

FM HARMONICS SPURIOUS RESPONSE: 80 dB

FM IF STAGES: 5

FM STEREO MONO AUTO SWITCHING: Yes

AM-FM FRONT END: Field Effect Transistorized

POWER CONSUMPTION: 90 watts (at full power)

DIMENSION: 16½″ W, 5½″ H, 12″ D.

NET WEIGHT: 23 Lbs.