KENWOOD

TRANSISTOR AUTOMATIC FM STEREO RECEIVER

TK-80

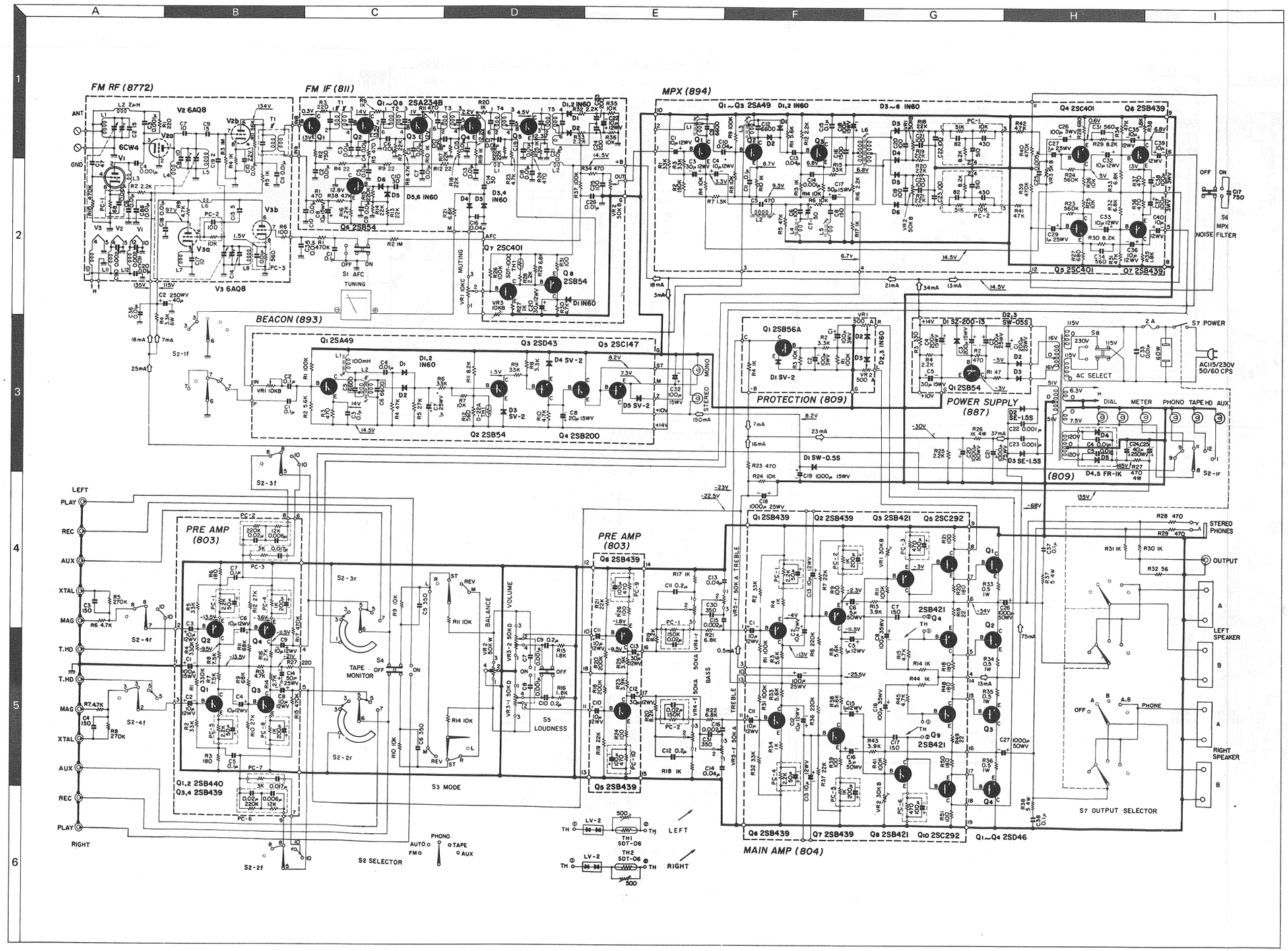

SPECIFICATIONS

AMPLIFIER SECTION

Total Music Power:	80 watts (IHF Standard)
RMS Power: (0.9% harmonic distortion at 1 Kc)	32 watts / 32 watts
Damping Factor:	20
Frequency Response:	20 — 60,000 cps ±1 db 15 — 120,000 cps ±3 db
Hum and Noise:	Phono −60 db, AUX −72 db (below rated output)
Bass Control:	±12 db (50 cps)
Treble Control:	±12 db (10,000 cps)
Input Sensitivity:	MAG 2mV, Tape HD 2mV, AUX 200mV.
Loudness Control:	+10 db 50 cps, +5 db 10,000 cps (at Volume Control −30 db)

FM TUNER SECTION

Usable Sensitivity:	1.8 microvolts (IHF Standard)
Signal to Noise Ratio:	60 db (at 100% modulation 1mV input)
Image Rejection:	55 db
SCA Rejection:	50 db
Capture Ratio:	2 db
Stereo Separation:	38 db at 400 cps
Frequency Drift:	0.02% without AFC
Special Circuit:	Automatic Switching FM Stereo tuner, Automatic Mono Stereo Indicator, Interstation Muting, MPX Noise Filter, Output Selector Switch, Silicon Power Transistor Main Amplifier, Tape Monitor.
Transistors And Diodes:	42 transistors, 13 silicon diodes, 17 germanium diodes, 1 zener diode.
Power Consumption:	50 — 60 cps 110 — 120/220 — 230 volts, No signal — 25 watts, Full power — 170 watts.
Dimension:	Width 17-3/4", Height 5-13/16", Depth 14".
Net Weight:	28 lbs

TK-80 TK-80

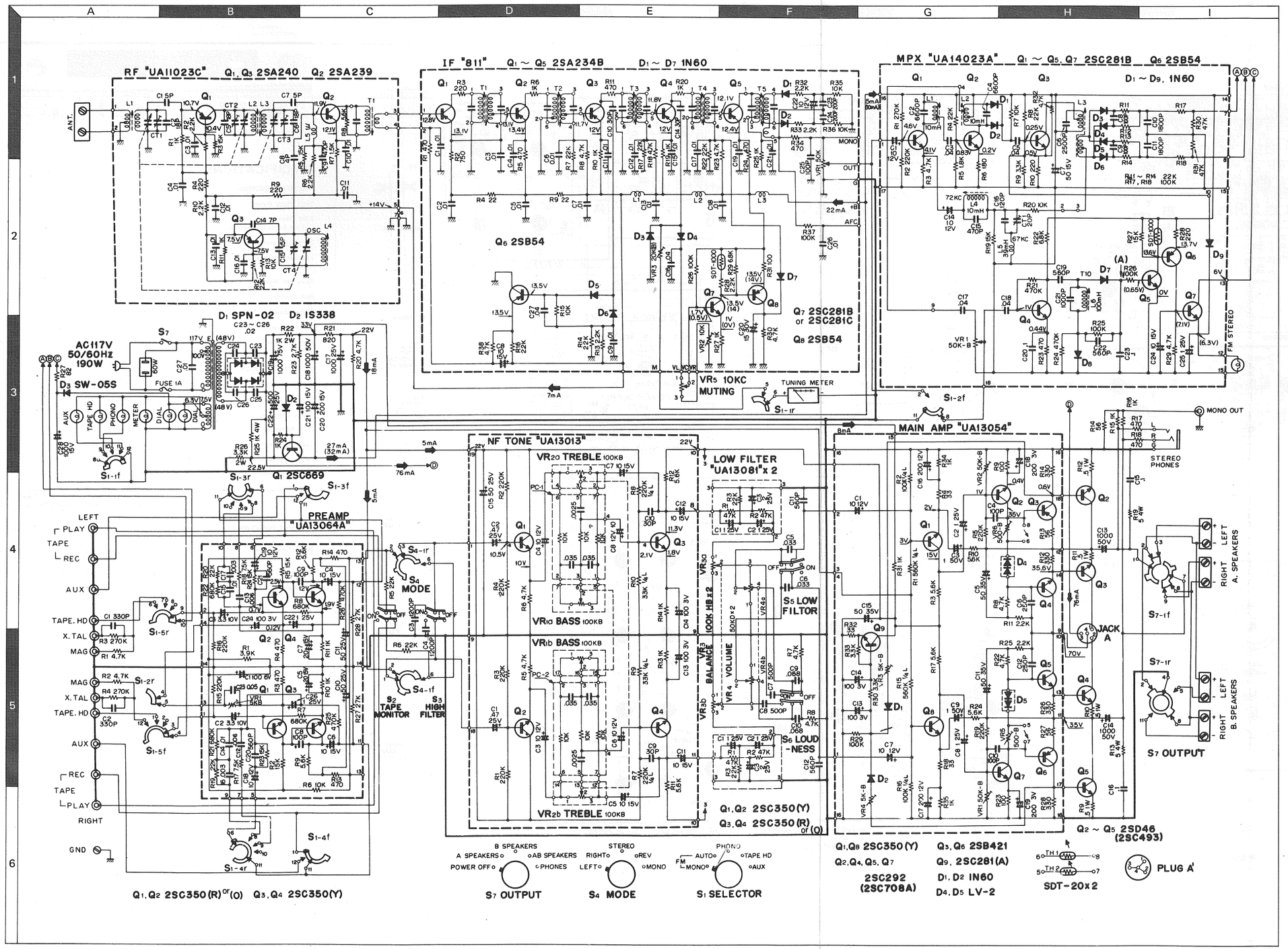

39 39

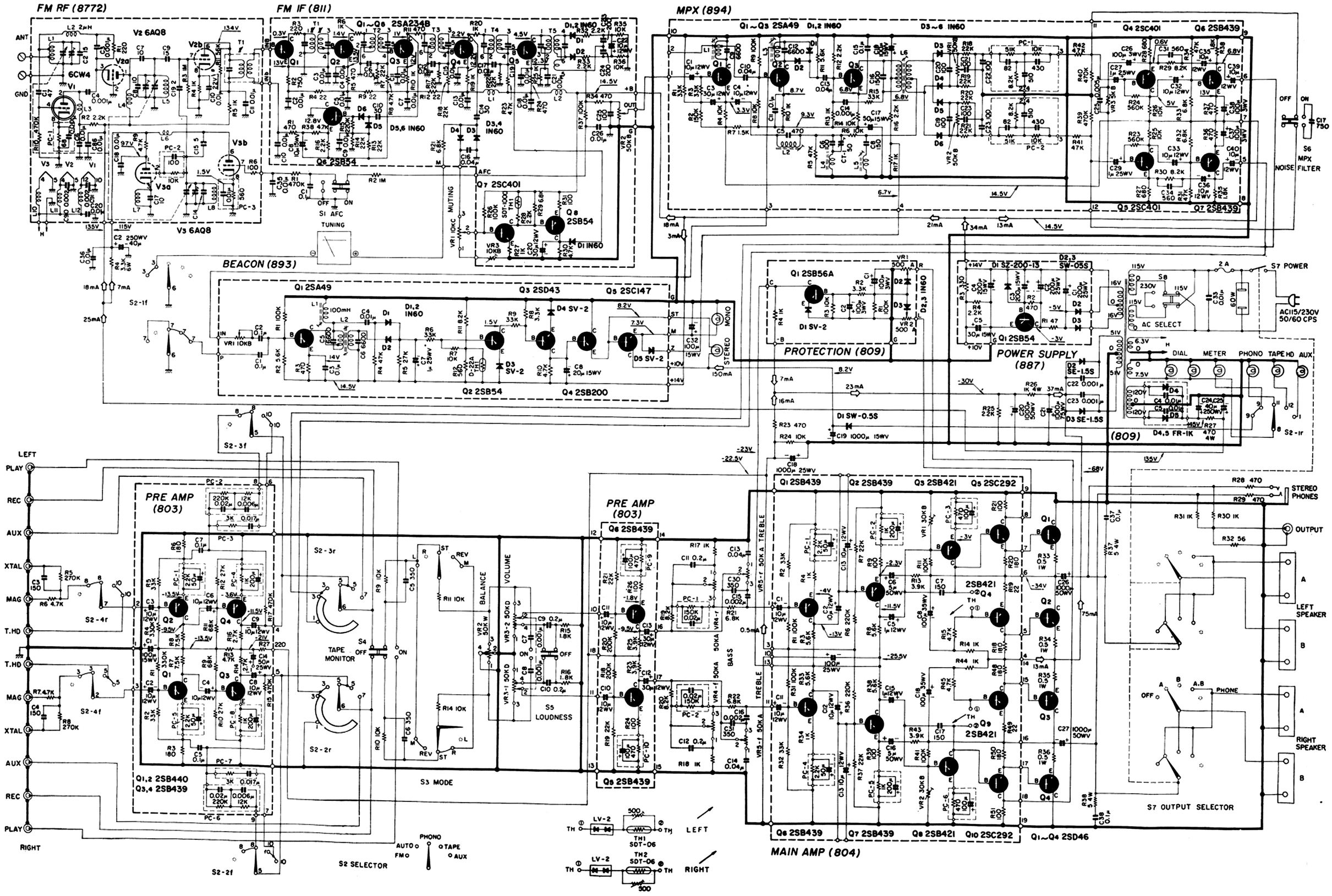
FM RF (8772)
FM IF (811)
MPX (894)
BEACON (893)
PROTECTION (809)
POWER SUPPLY (887)
PRE AMP (803)
MAIN AMP (804)
ANT
GND
V2 6AQ8
6CW4
V3 6AQ8
Q1~Q6 2SA234B
Q6 2SB54
Q7 2SC401
Q8 2SB54
D5,6 IN60
D3,4 IN60
D1,2 IN60
D1 IN60
AFC
MUTING
S1 AFC
TUNING
OFF
ON
Q1~Q3 2SA49
D1,2 IN60
D3~6 IN60
Q4 2SC401
Q6 2SB439
Q5 2SC401
Q7 2SB439
S6 MPX NOISE FILTER
Q1 2SA49
Q3 2SD43
Q5 2SC147
Q2 2SB54
Q4 2SB200
D1,2 IN60
D4 SV-2
D3 SV-2
D5 SV-2
STEREO
MONO
Q1 2SB56A
D1 SV-2
D1 SZ-200-13
SW-05S
Q1 2SB54
D1 SW-0.5S
D2 SE-1.5S
D3 SE-1.5S
D4,5 FR-1K
S7 POWER
AC115/230V 50/60 CPS
AC SELECT
DIAL
METER
PHONO
TAPE HD
AUX
S2-1f
S2-3f
S2-1r
S2-3r
S2-4r
S2-4f
S2-2r
S2-2f
LEFT
PLAY
REC
AUX
XTAL
MAG
T.HD
RIGHT
Q1,2 2SB440
Q3,4 2SB439
TAPE MONITOR
S4
S3 MODE
VOLUME
BALANCE
S5 LOUDNESS
BASS
TREBLE
Q6 2SB439
Q9 2SB439
Q1 2SB439
Q2 2SB439
Q3 2SB421
Q5 2SC292
Q6 2SB439
Q7 2SB439
Q8 2SB421
Q10 2SC292
Q1~Q4 2SD46
STEREO PHONES
OUTPUT
LEFT SPEAKER
RIGHT SPEAKER
S7 OUTPUT SELECTOR
PHONE
S2 SELECTOR
AUTO
FM
PHONO
TAPE
AUX
LV-2
TH1 SDT-06
TH2 SDT-06
LEFT
RIGHT

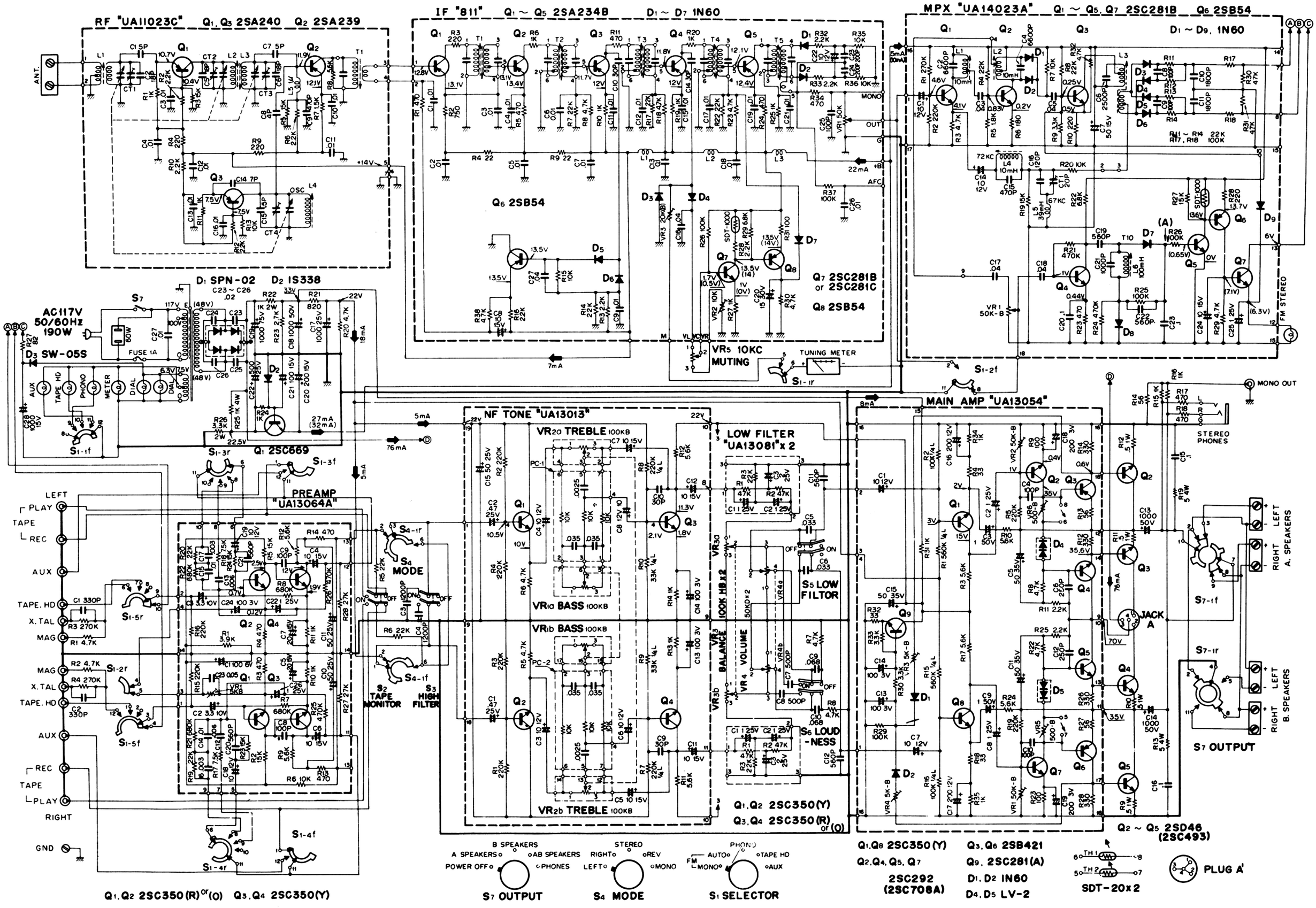
RF "UA11023C" Q1, Q3 2SA240 Q2 2SA239
IF "811" Q1 ~ Q5 2SA234B D1 ~ D7 1N60
MPX "UA14023A" Q1 ~ Q5, Q7 2SC281B Q6 2SB54
D1 ~ D9, 1N60
ANT.
Q6 2SB54
Q7 2SC281B or 2SC281C
Q8 2SB54
VR5 10KC MUTING
TUNING METER
D1 SPN-02 D2 1S338
AC117V 50/60Hz 190W
D3 SW-05S
FUSE 1A
Q1 2SC669
PREAMP "UA13064A"
NF TONE "UA13013"
VR2a TREBLE 100KB
VR1a BASS 100KB
VR1b BASS 100KB
VR2b TREBLE 100KB
LOW FILTER "UA13081" x 2
S5 LOW FILTER
S6 LOUD-NESS
VR4 VOLUME
VR3 BALANCE
MAIN AMP "UA13054"
Q2 ~ Q5 2SD46 (2SC493)
MONO OUT
STEREO PHONES
S7 OUTPUT
RIGHT A. SPEAKERS
RIGHT B. SPEAKERS
JACK A
FM STEREO
S4 MODE
S2 TAPE MONITOR
S3 HIGH FILTER
LEFT
PLAY
TAPE
REC
AUX
TAPE. HD
X. TAL
MAG
GND
RIGHT
Q1, Q2 2SC350(R) or (O) Q3, Q4 2SC350(Y)
Q1, Q2 2SC350(Y)
Q3, Q4 2SC350(R) or (O)
Q1, Q8 2SC350(Y)
Q2, Q4, Q5, Q7 2SC292 (2SC708A)
Q3, Q6 2SB421
Q9, 2SC281(A)
D1, D2 IN60
D4, D5 LV-2
SDT-20x2
PLUG A'
S7 OUTPUT
S4 MODE
S1 SELECTOR
A SPEAKERS
B SPEAKERS
AB SPEAKERS
POWER OFF
PHONES
STEREO
REV
MONO
PHONO
TAPE HD
AUX
AUTO
FM MONO