KENWOOD

HI/FI STEREO COMPONENTS

SERVICE MANUAL

. . . the sound

approach

to quality

MODEL TK-80U

ALL TRANSISTOR
FM AUTOMATIC STEREO RECEIVER

www.hifiengine.com

PARTS DESCRIPTION LIST

RF "UA11062C" SECTION

● CAPACITORS

Symbol No.	Description	
C1	Ceramic	5mmfd±10%
C2	Ceramic	18mmfd±10%
C3,4	Ceramic	0.01mfd+100%,-0
C5,6	Ceramic	18mmfd±10%
C7	Ceramic	5mmfd±10%
C8	Ceramic	4mmfd±10%
C9	Ceramic	470mmfd±10%
C10~13	Ceramic	0.01mfd+100%,-0
C14	Ceramic	7mmfd±10%
C15	Ceramic	4mmfd±10%
C16	Ceramic	0.01mfd+100%,-0
CT1~3	Cylinder TRIM	1mmfd 9mmfd
CT4	Ceramic TRIM	2.5mmfd 10mmfd

● RESISTORS

Symbol No.	Description	
R1	Composition	1K±5% 1/3W
R2	Composition	2.2K±5% 1/3W
R3	Composition	15K±5% 1/3W
R4	Composition	220ohm±5% 1/3W
R5	Composition	15K±5% 1/3W
R6	Composition	2.2K±5% 1/3W
R7	Composition	1.5K±5% 1/3W
R8	Composition	5.6K±5% 1/3W
R9	Composition	220ohm±5% 1/3W
R10	Composition	2.2K±5% 1/3W
R11	Composition	1K±5% 1/3W
R12	Composition	2.2K±5% 1/3W
R13	Composition	10K±5% 1/3W

● COILS/TRANSFORMER

Symbol No.	Description	Part No.
L1	FM ANT Coil	L24-UA11023A
L2	FM RF Coil	L24-UA11023RA
L3	FM RF Coil	L24-UA11023RB
L4	FM OSC Coil	L24-UA11023S
L5	Choke Coil	L20-010
T1	FM IFT 10.7MHz	L52-10

● TRANSISTORS

Symbol No.	Description
Q1	2SA240 FM RF Amp.
Q2	2SA239 FM MIXER
Q3	2SA240 FM OSC

IF "811" SECTION

● CAPACITORS

Symbol No.	Description	
C1~7	Ceramic	0.01mfd+100%,-0
C8	Electrolytic Tubular	10mfd 15WV
C9	Ceramic	0.01mfd+100%,-0
C10	Ceramic	30mmfd±10%
C11,12,13	Ceramic	0.01mfd+100%,-0
C14	Ceramic	30mmfd±10%
C15,17,18,19	Ceramic	0.01mfd+100%,-0
C16	Ceramic	0.04mfd+100%,-0
C20	Electrolytic Tubular	15mfd 30WV
C21	Ceramic	0.01mfd+100%,-0
C22	Electrolytic Tubular	10mfd 12WV
C23,24	Ceramic	200mmfd±10%
C25	Ceramic	100mmfd±10%
C26	Ceramic	0.01mfd+100%,-0
C27	Ceramic	0.04mfd+100%,-0

● RESISTORS

Symbol No.	Description	
R1	Composition	470ohm±5% 1/3W
R2	Composition	750ohm±5% 1/3W
R3	Composition	220ohm±5% 1/3W
R4	Composition	22ohm±5% 1/3W
R5	Composition	470ohm±5% 1/3W
R6	Composition	1K±5% 1/3W
R7	Composition	22K±5% 1/3W
R8	Composition	4.7K±5% 1/3W
R9	Composition	22ohm±5% 1/3W
R10	Composition	1K±5% 1/3W
R11	Composition	470ohm±5% 1/3W
R12	Composition	22ohm±5% 1/3W
R13	Composition	2.2K±5% 1/3W
R14	Composition	22K±5% 1/3W
R15	Composition	10K±5% 1/3W
R16	Composition	2.2K±5% 1/3W
R17	Composition	22K±5% 1/3W
R18	Composition	47K±5% 1/3W
R19,20	Composition	1K±5% 1/3W
R22	Composition	22K±5% 1/3W
R23	Composition	4.7K±5% 1/3W
R24	Composition	470ohm±5% 1/3W
R25	Composition	1K±5% 1/3W

www.hifiengine.com

PARTS DESCRIPTION LIST

Symbol No.	Description	
R26	Composition	100K±5% 1/3W
R27	Composition	1K±5% 1/3W
R28	Composition	2.2K±5% 1/3W
R29	Composition	6.8K±5% 1/3W
R30	Composition	4.7K±5% 1/3W
R31	Composition	100ohm±5% 1/3W
R32,33	Composition	2.2K±5% 1/3W
R34	Composition	470ohm±5% 1/3W
R35,36	Composition	10K±5% 1/3W
R37	Composition	100K±5% 1/3W
R38	Composition	4.7K±5% 1/3W

● COILS/TRANSFORMERS

Symbol No.	Description	Part No.
L1	Choke Coil	L20-010
L2	Choke Coil	L20-010
L3	Choke Coil	L20-010
T2	Transformer IF 10.7MHz	L20-60
T3	Transformer IF 10.7MHz	L02-61
T4	Transformer IF 10.7MHz	L02-62
T5	Transformer IF 10.7MHz	L02-63
T6	Transformer IF 10.7MHz & Det.	L02-64

● POTENTIOMETERS

Symbol No.	Description	Part No.
VR1	50K Level Set	R10-56
VR2	10K(C) Muting	R10-54
VR3	20K(B)	R10-68

● TRANSISTORS/DIODES

Symbol No.	Description
Q1~5	2SA234B FM IF Amp.
Q6	2SB54 AGC Amp.
Q7	2SC281B Muting Amp.
Q8	2SB54 Muting Amp.
D1,2	1N60 FM Det.
D3,4	1N60 Muting Rect.
D5,6	1N60 AGC Rect.
D7	1N60 Switching
TH1	SDT-1000 Bias Stabilizer

MPX "UA14023A" SECTION

● CAPACITORS

Symbol No.	Description	
C1	Electrolytic Tubular	10mfd 12WV
C2	Mica	6600mmfd±5%
C3	Ceramic	0.04mfd±20%
C4	Mica	6600mmfd±5%
C5	Ceramic	0.04mfd±20%
C6	Mica	2500mmfd±5%
C7	Electrolytic Tubular	50mfd 15WV
C8,9	Ceramic	100mmfd±10%
C10,11	Ceramic	1800mmfd±20%
C14	Electrolytic Tubular	10mfd 12WV
C15	Polystiyrole	470mmfd±10%
C16	Polystiyrole	120mmfd±10%
C17,18	Ceramic	0.04mfd±20%
C19	Ceramic	560mmfd±20%
C20	Mylar	0.1mfd±20%
C21	Mica	1000mmfd±5%
C22	Ceramic	560mmfd±20%
C23	Mylar	0.1mfd±20%
C24	Electrolytic Tubular	20mfd 15WV
C25	Electrolytic Tubular	1mfd 25WV

● RESISTORS

Symbol No.	Description	
R1	Composition	270K±5% 1/2W
R2	Composition	220K±5% 1/2W
R3	Composition	4.7K±5% 1/2W
R4	Composition	22K±5% 1/2W
R5	Composition	1.8K±5% 1/2W
R6	Composition	180ohm±5% 1/2W
R7	Composition	10K±5% 1/2W
R8	Composition	22K±5% 1/2W
R9	Composition	3.3K±5% 1/2W
R10	Composition	220ohm±5% 1/2W
R11~14	Composition	22K±5% 1/2W
R17,18	Composition	100K±5% 1/2W
R19	Composition	15K±5% 1/2W
R20	Composition	10K±5% 1/2W
R21	Composition	470K±5% 1/2W
R22	Composition	6.8K±5% 1/2W
R23	Composition	470ohm±5% 1/2W
R24	Composition	470K±5% 1/2W

www.hifiengine.com

PARTS DESCRIPTION LIST

Symbol No.	Description	
R25,26	Composition	100K±5% 1/2W
R27	Composition	15K±5% 1/2W
R28	Composition	220ohm±5% 1/2W
R29	Composition	4.7K±5% 1/2W
R30,31	Composition	47K±5% 1/2W
R32	Composition	4.7K±5% 1/2W

● COILS

Symbol No.	Description	Part No.
L1	19KHz Tune Coil	L17-04
L2	19KHz Filter Coil	L17-05
L3	38KHz Tune Coil	L17-43
L4	Filter Coil	L17-44
L5	Filter Coil	L17-29
L6	19KHz Tune Coil	L17-23

● POTENTIOMETER

Symbol No.	Description	Part No.
VR1	50K(B) LEVEL Set	R10-56

● TRANSISTORS/DIODES

Symbol No.	Description	
Q1	2SC281B	Composite Amp.
Q2	2SC281B	19KHz Amp.
Q3	2SC281B	38KHz OSC
Q4	2SC281B	19KHz Beacon Signal Amp.
Q5	2SC281B	DC Amp.
Q6	2SB54	DC Amp.
Q7	2SC281B	Switching
D1,2	1N60 Doubler	
D3~6	1N60 MPX Det.	
D7	1N60 Noise Cancel	
D8	1N60 MPX Rect.	
D9	1N60 Switching	
TH1	STD-1000 Stabilizer	

PRE AMP "UA13064A" SECTION

● CAPACITORS

Symbol No.	Description
C1	Electrolytic 100mfd 6WV Tubular
C2	Electrolytic 3.3mfd 10WV Tubular
C3	Electrolytic 3.3mfd 10WV Tubular
C4	Electrolytic 10mfd 15WV Tubular
C5	Electrolytic 20mfd 15WV Tubular
C6	Electrolytic 10mfd 15WV Tubular
C7	Electrolytic 20mfd 15WV Tubular
C8,9	Ceramic 100mmfd±20%
C10,11	Electrolytic 50mfd 25WV Tubular
C12,13	Mylar 0.006mfd±20%
C14,15	Mylar 0.01mfd±20%
C16,17	Mylar 0.003mfd±20%
C18,19	Electrolytic 10mfd 12WV Tubular
C20,21	Ceramic 560mmfd±20%
C22	Electrolytic 1mfd 25WV Tubular
C23	Ceramic 0.005mfd±20%
C24	Electrolytic 100mfd 3WV Tubular
C26	Electrolytic 1mfd 25WV Tubular

● RESISTORS

Symbol No.	Description	
R1	Composition	3.9K±5% 1/2W
R2	Composition	15K±5% 1/3W
R3,4	Composition	470ohm±5% 1/2W
R5	Composition	15K±5% 1/3W
R6	Composition	10K±5% 1/2W
R7,8	Composition	680K±5% 1/3W
R9	Composition	5.6K±5% 1/2W
R10,11	Composition	1K±5% 1/2W
R12	Composition	5.6K±5% 1/2W
R13,14	Composition	470ohm±5% 1/2W
R15,16	Composition	220K±5% 1/2W
R17,18	Composition	7.5K±5% 1/2W
R19,20	Composition	22K±5% 1/2W
R21,22	Composition	680K±5% 1/2W
R23,24	Composition	15K±5% 1/2W
R25,26	Composition	470K±5% 1/2W
R27,28	Composition	27K±5% 1/2W

www.hifiengine.com

PARTS DESCRIPTION LIST

● POTENTIOMETERS

Symbol No.	Description	Part No.
VR1	5K(B) Separation	R10-53

● TRANSISTORS

Symbol No.	Description
Q1,2	2SC350(R) Phono E.Q. Amp.
Q3,4	2SC350(Y) Phono E.Q. Amp.

NF TONE "UA13013" SECTION

● CAPACITORS

Symbol No.	Description
C1,2	Electrolytic 0.47mfd 25WV Tubular
C3,4	Electrolytic 10mfd 12WV Tubular
C5	Electrolytic 10mfd 15WV Tubular
C6	Electrolytic 10mfd 12WV Tubular
C7	Electrolytic 10mfd 15WV Tubular
C8	Electrolytic 10mfd 12WV Tubular
C9,10	Ceramic 30mmfd ±10%
C11,12	Electrolytic 10mfd 15WV Tubular
C13,14	Electrolytic 100mfd 3WV Tubular
C15	Electrolytic 50mfd 25WV Tubular

● RESISTORS

Symbol No.	Description
R1~4	Composition 220K±5% 1/2W
R5,6	Composition 4.7K±5% 1/2W
R7,8	Composition 220K±5% 1/3WL
R9,10	Composition 33K±5% 1/3WL
R11,12	Composition 5.6K±5% 1/2W
R13,14	Composition 1K±5% 1/2W

● PRINTED CIRCUITS

Symbol No.	Description	Part No.
PC1	10K,10K,10K,0.0025mfd 0.035mfd, 0.035mfd NF Tone	R15-62
PC2	10K,10K,10K,0.0025mfd 0.035mfd, 0.035mfd NF Tone	R15-62

● TRANSISTORS

Symbol No.	Description
Q1,2	2SC350(Y) Emitter Follower
Q3,4	2SC350(R) NF Tone

LOW FILTER "UA13081"X2 SECTION

● CAPACITORS

Symbol No.	Description
C1,2	Electrolytic 1mfd 25WV Tubular
C3	Electrolytic 2mfd 25WV Tubular

● RESISTORS

Symbol No.	Description
R1,2	Composition 47K±5% 1/2W
R3	Composition 22K±5% 1/2W

MAIN AMP "UA13054" SECTION

● CAPACITORS

Symbol No.	Description
C1	Electrolytic 10mfd 12WV Tubular
C2	Electrolytic 1mfd 25WV Tubular
C3	Electrolytic 1mfd 50WV Tubular
C4	Ceramic 100mmfd±10%
C5	Electrolytic 50mfd 35WV Tubular
C6	Ceramic 250mmfd±10%
C7	Electrolytic 10mfd 12WV Tubular

www.hifiengine.com

PARTS DESCRIPTION LIST

Symbol No.	Description	
C8	Electrolytic Tubular	1mfd 25WV
C9	Electrolytic Tubular	1mfd 50WV
C10	Ceramic	100mmfd±10%
C11	Electrolytic Tubular	50mfd 35WV
C12	Ceramic	250mmfd±10%
C13,14	Electrolytic Tubular	100mfd 3WV
C15	Electrolytic Tubular	50mfd 35WV
C16,17	Electrolytic Tubular	200mfd 3WV
C18,19	Electrolytic Tubular	200mfd 3WV

● RESISTORS

Symbol No.	Description	
R1	Composition	560K±5% 1/3WP
R2	Composition	100K±5% 1/3WP
R3	Composition	5.6K±5% 1/2W
R4	Composition	33ohm±5% 1/2W
R5	Composition	220K±5% 1/2W
R8	Composition	4.7K±5% 1/2W
R9	Composition	100ohm±5% 1/2W
R10	Composition	5.6K±5% 1/2W
R11	Composition	2.2K±5% 1/2W
R12	Composition	330ohm±5% 1/2W
R13	Composition	56ohm±5% 1/2W
R14	Composition	330ohm±5% 1/2W
R15	Composition	560K±5% 1/3WP
R16	Composition	100K±5% 1/3WP
R17	Composition	5.6K±5% 1/2W
R18	Composition	33ohm±5% 1/2W
R19	Composition	220K±5% 1/2W
R22	Composition	4.7K±5% 1/2W
R23	Composition	100ohm±5% 1/2W
R24	Composition	5.6K±5% 1/2W
R25	Composition	2.2K±5% 1/2W
R26	Composition	330ohm±5% 1/2W
R27	Composition	56ohm±5% 1/2W
R28	Composition	330ohm±5% 1/2W
R29	Composition	100K±5% 1/2W
R30	Composition	3.3K±5% 1/2W
R31	Composition	1K±5% 1/2W
R32	Composition	33ohm±5% 1/2W
R33	Composition	3.3K±5% 1/2W
R34,35	Composition	1K±5% 1/2W

● POTENTIOMETERS

Symbol No.	Description	Part No.
VR1,2	50K(B) DC Bias	R10-56
VR3,4	5K Protection Level	R10-53
VR5,6	500ohm DC Bias	R10-46

● TRANSISTORS/DIODES

Symbol No.	Description
Q1,8	2SC350(Y) Audio Amp.
Q2,7	2SC292 Driver
Q3,5	2SC292 Complementary phase inverter
Q4,6	2SB421 Complementary phase inverter
Q9	2SC281(A) Protection
D1,2	1N60 Protection
D4,5	LV-2 Stabilizer

MAIN CHASSIS "AA43" SECTION

● CAPACITORS

Symbol No.	Description	
C1,2	Ceramic	330mmfd±20%
C3,4	Ceramic	1200mmfd±20%
C5,6	Mylar	0.033mfd±20%
C7,8	Ceramic	500mmfd±20%
C9,10	Mylar	0.068mfd±20%
C11,12	Ceramic	560mmfd±20%
C13,14	Electrolytic Tubular	1000mfd 50WV
C15,16	Mylar	0.1mfd 12WV
C17	Electrolytic Tubular	1000mfd 25WV
C18	Electrolytic Tubular	1000mfd 50WV
C19	Electrolytic Tubular	1000mfd 75WV
C20	Electrolytic Tubular	200mfd 15WV
C21	Electrolytic Tubular	100mfd 15WV
C22	Electrolytic Tubular	500mfd 25WV
C23~26	Paper Tubular	0.02mfd±20%
C27	Paper Tubular	0.01mfd±20%
C28	Electrolytic Tubular	1000mfd 15WV

www.hifiengine.com

PARTS DESCRIPTION LIST

● RESISTORS

Symbol No.	Description	
R1,2	Composition	4.7K±5% 1/2W
R3,4	Composition	270K±5% 1/2W
R5,6	Composition	22K±5% 1/2W
R7,8	Composition	4.7K±5% 1/2W
R9~12	Wire Wound	0.5ohm±5% 1WL
R13	Wire Wound	5ohm±5% 4WP
R14	Composition	56ohm±5% 1/2W
R15,16	Composition	1K±5% 1/2W
R17,18	Composition	470ohm±5% 1/2W
R19	Wire Wound	5ohm±5% 4WP
R20	Composition	4.7K±5% 1/2W
R21	Composition	820ohm±5% 1/2W
R22	Wire Wound	1K±5% 2WP
R23	Composition	2.7K±5% 1/2W
R24	Composition	1K±5% 1/2W
R25	Wire Wound	1K±5% 4WP
R26	Wire Wound	3.3K±5% 2WP
R27	Composition	82ohm±5% 1/2W
R28,30	Composition	10K±5% 1/2W
R29,31	Composition	68K±5% 1/2W

● TRANSISTORS

Symbol No.	Description
Q1	2SC669 Regulator
Q2	2SD46 Power Amp.
Q3	2SD46 Power Amp.
Q4	2SD46 Power Amp.
Q5	2SD46 Power Amp.
D1	SPN-02 Rect.
D2	1S338 Zener
D3	SW-05S Rect.
TH1,2	SDT-20 Thermistor

● SWITCHES

Symbol No.	Description	Part No.
S1	SELECTOR Rotary	S03-610
S2	TAPE MONITOR See Saw	S10-22J
S3	HIGH FILTER See Saw	S10-22J
S4	MODE Rotary	S03-606
S5	LOW FILTER See Saw	S10-22J
S6	LOUDNESS See Saw	S10-22J
S7	OUTPUT Rotary	S03-253
S8	POWER Slide	S10-22R

● POTENTIOMETERS

Symbol No.	Description	Part No.
VR1	Dual BASS 100K(B)	R04-0211
VR2	Dual TREBLE 100K(B)	R04-0211
VR3	Dual BALANCE 100K(HB)	R02-0152
VR4	Dual VOLUME 50K(D)	R02-2126
VR5	MUTING 10K(C)	R01-0157

● MISCELLANEOUS

Symbol No.	Description	Part No.
M	TUNING Meter	T11-57
-	Fuse Holder	S15-08
-	Variable Capacitor 4 Tuning, TUNING	D01-120
	Knob SELECTOR,MODE, MUTING, OUTPUT	S14-174B
	Knob VOLUME,TUNING	S14-151B
	Knob Back BASS, TREBLE	S14-175B
	Knob Back BALANCE	S14-176B
	Knob Front BASS, TREBLE, BALANCE	S14-173B
P.T.	Transformer, Power	T01-177M
	US Jack, Stereo Phones	E16-08
	Dress Panel	A05-AA43
	Dial Scale	A07-AA432
	Case	A01-AA43
	Jewel, Red	A53-13
	Jewel, Green	A53-15
	Jewel, Blue	A53-16
	5p Connector	E07-35B

www.hifiengine.com

CHASSIS TOP VIEW

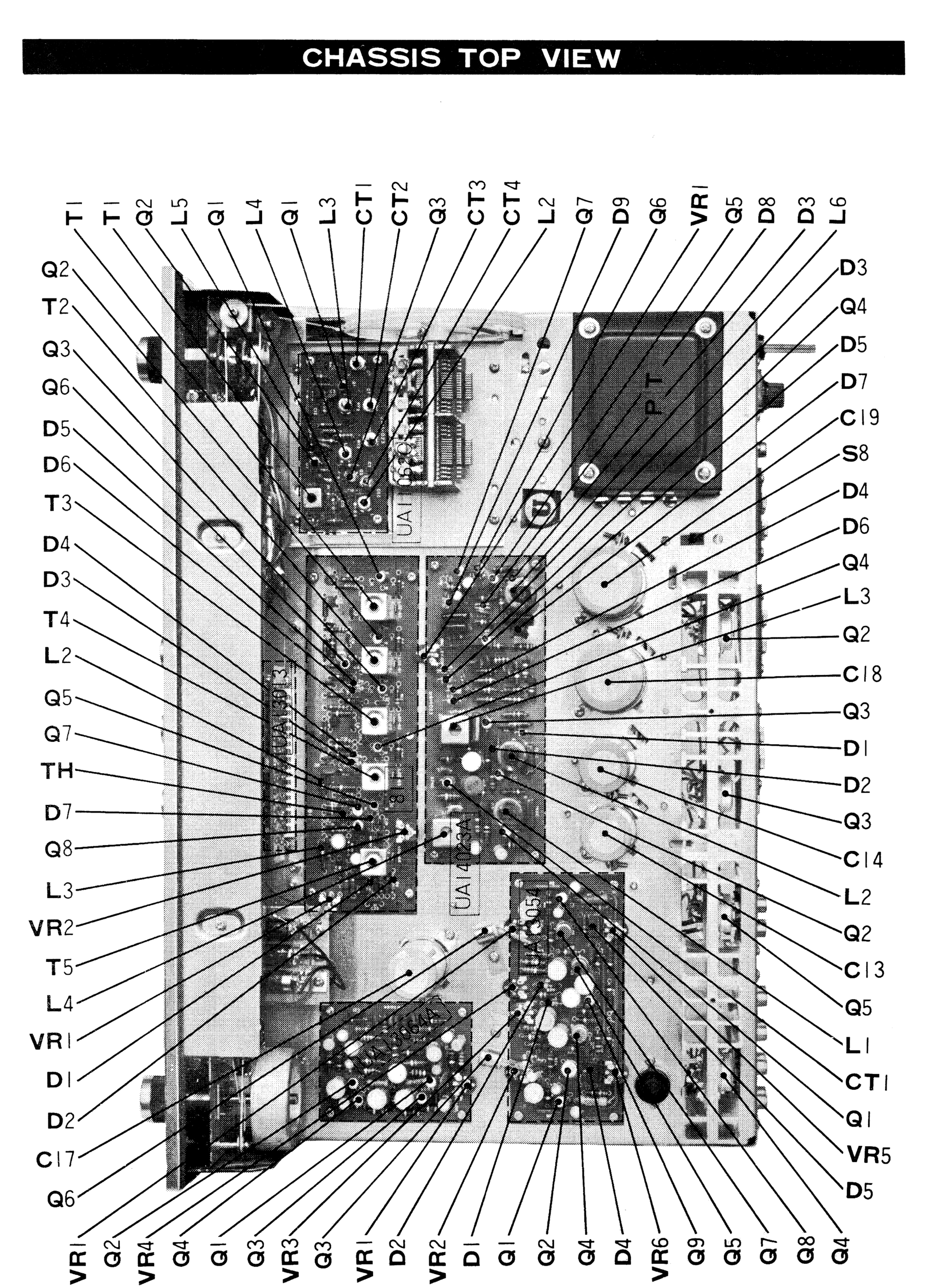

CHASSIS BOTTOM VIEW

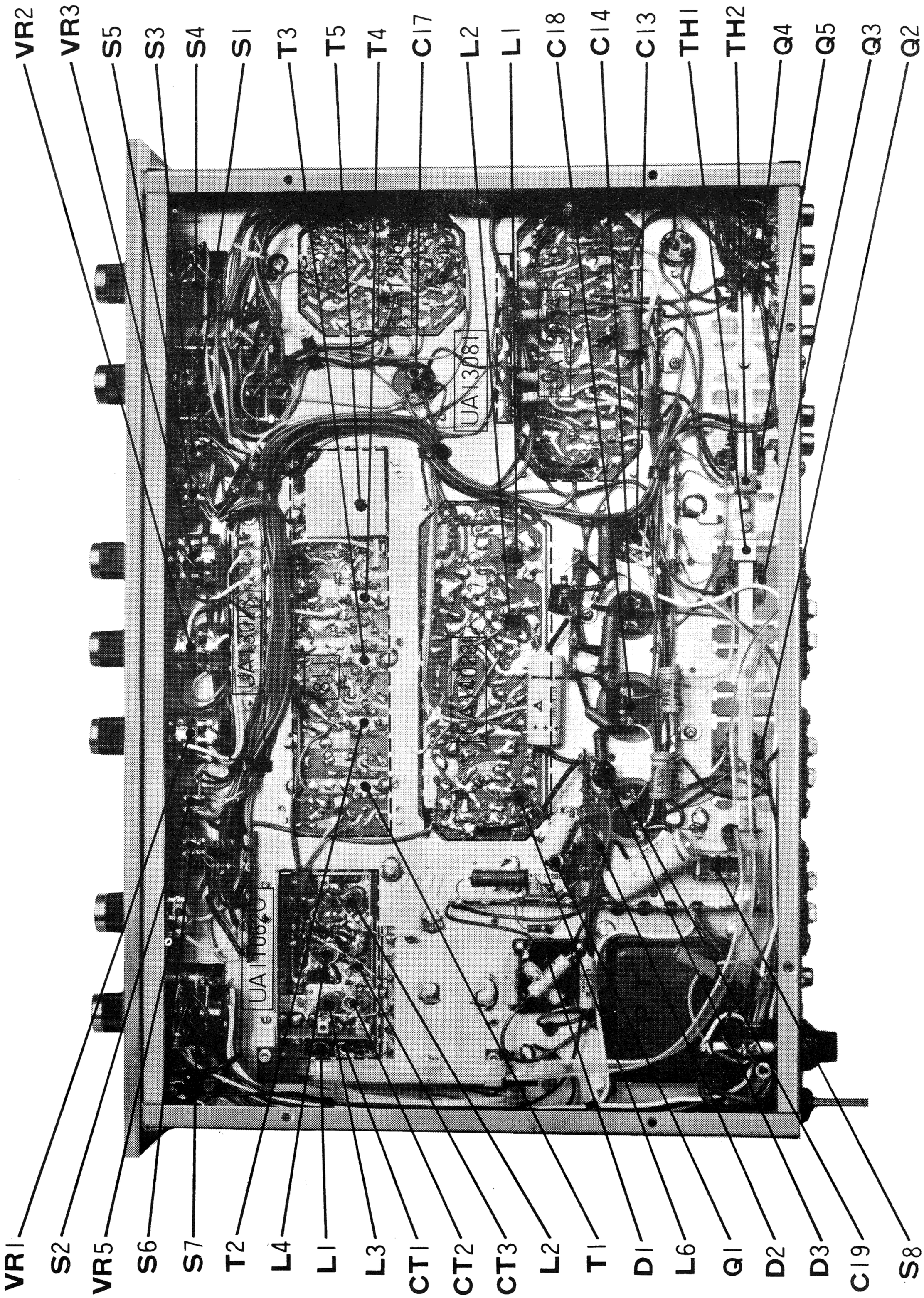

SEALED CIRCUIT ASSEMBLIES-PHONTOM VIEWS

RF "UA11062C" Section

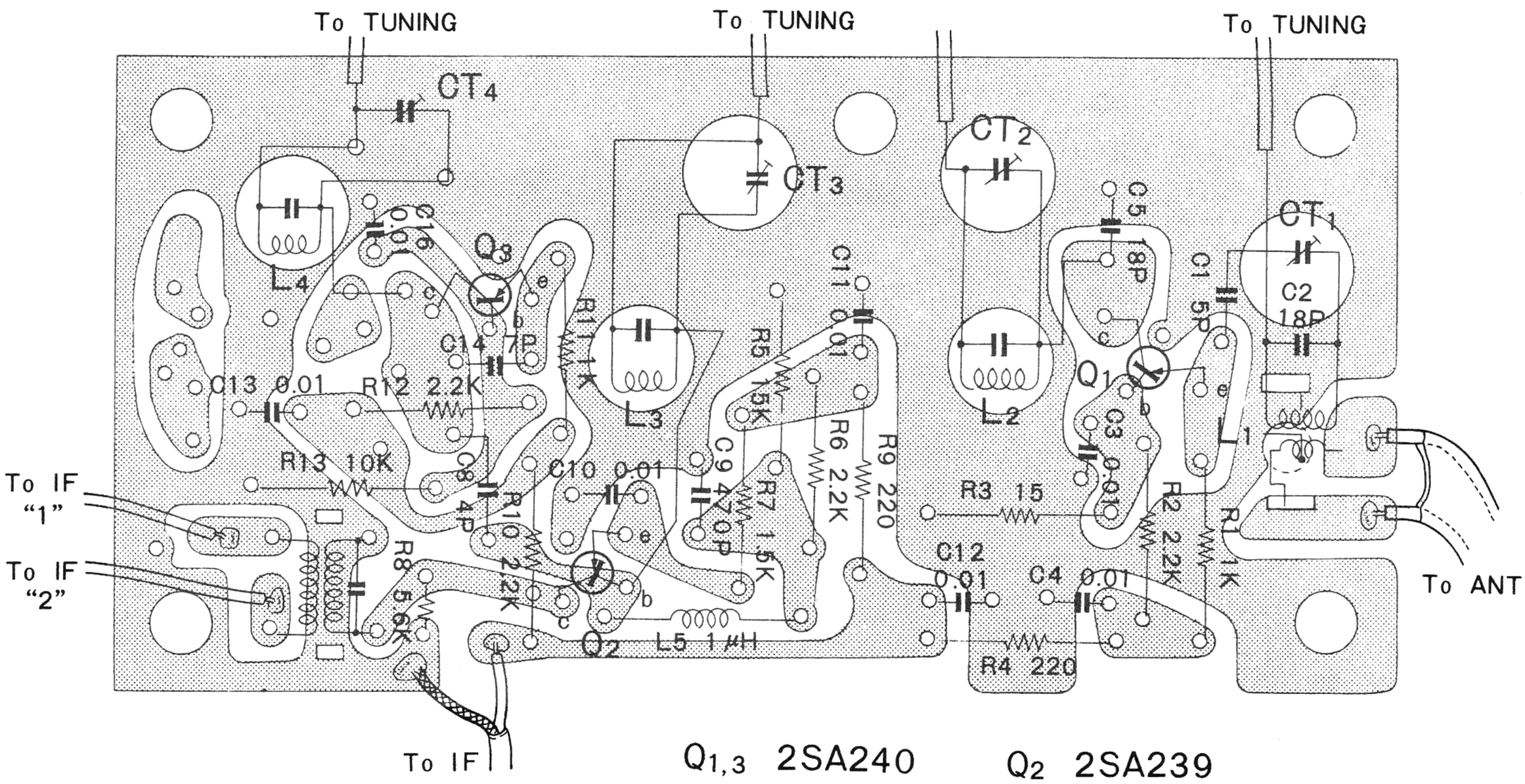

$Q_{1,3}$ 2SA240 Q_2 2SA239

www.hifiengine.com

SEALED CIRCUIT ASSEMBLIES-PHONTOM VIEWS

FM IF "811" Section

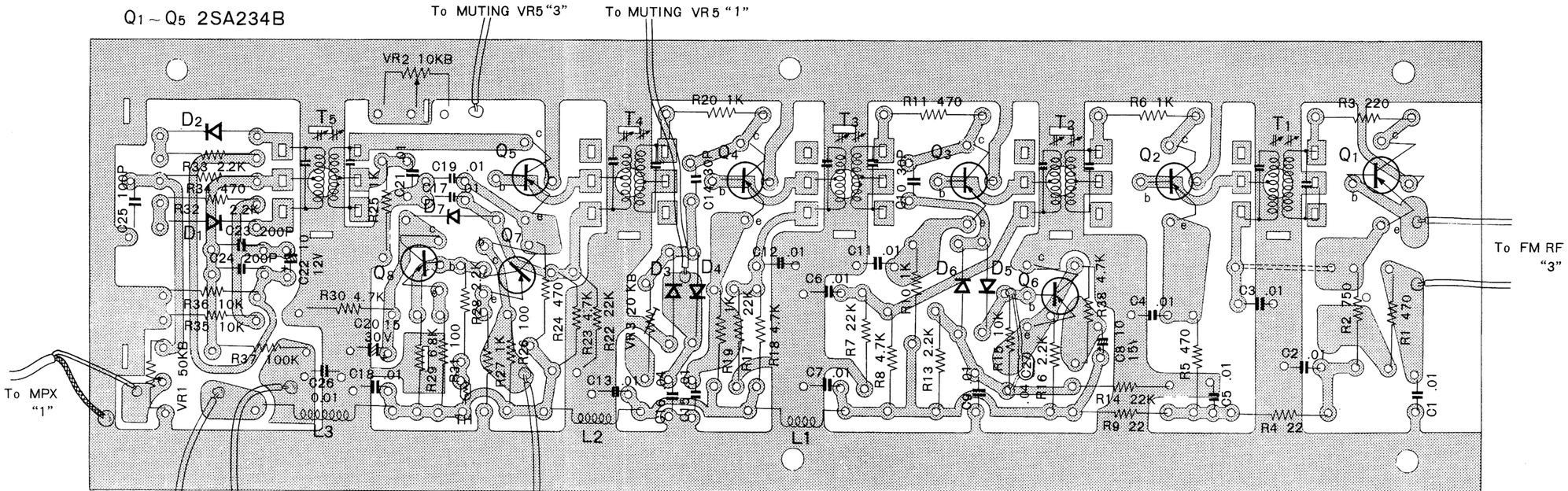

MPX "UA14023A" Section

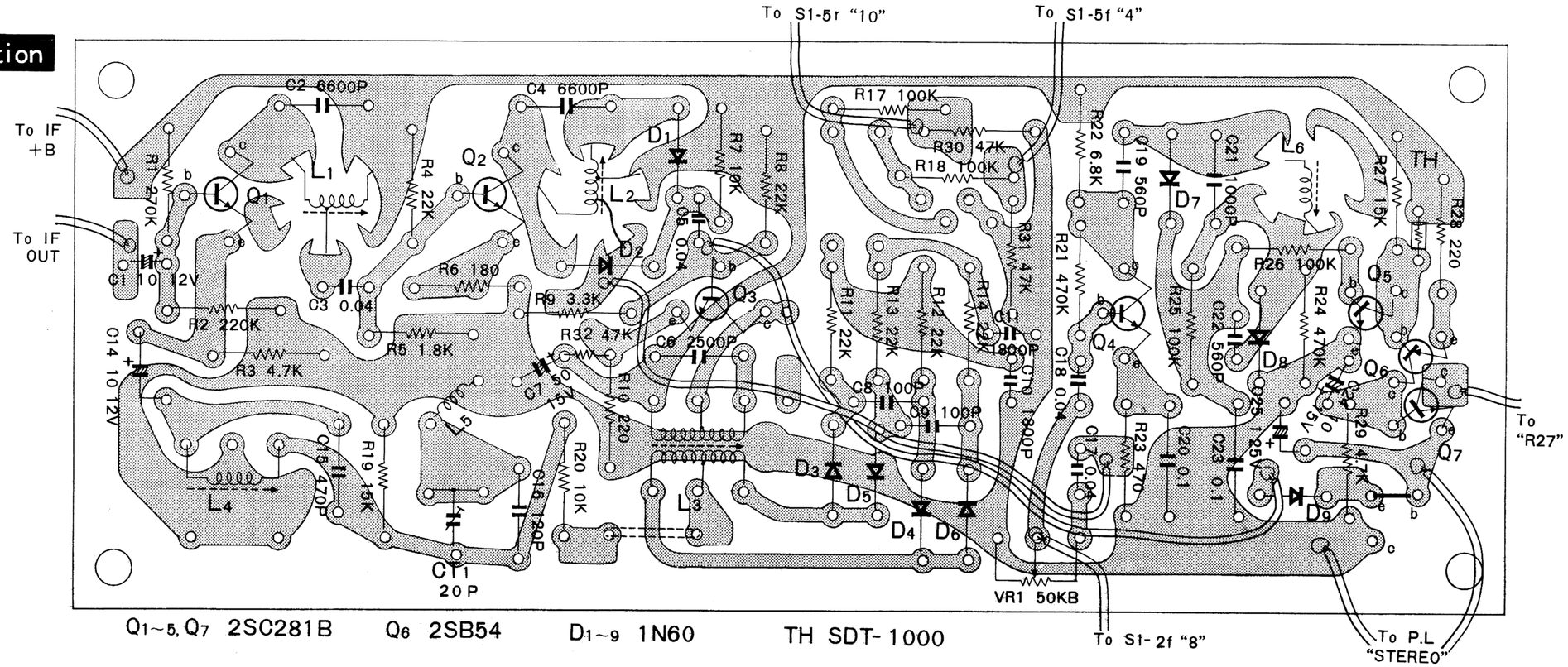

SEALED CIRCUIT ASSEMBLIES-PHONTOM VIEWS

PRE AMP (UAI3064A) Section

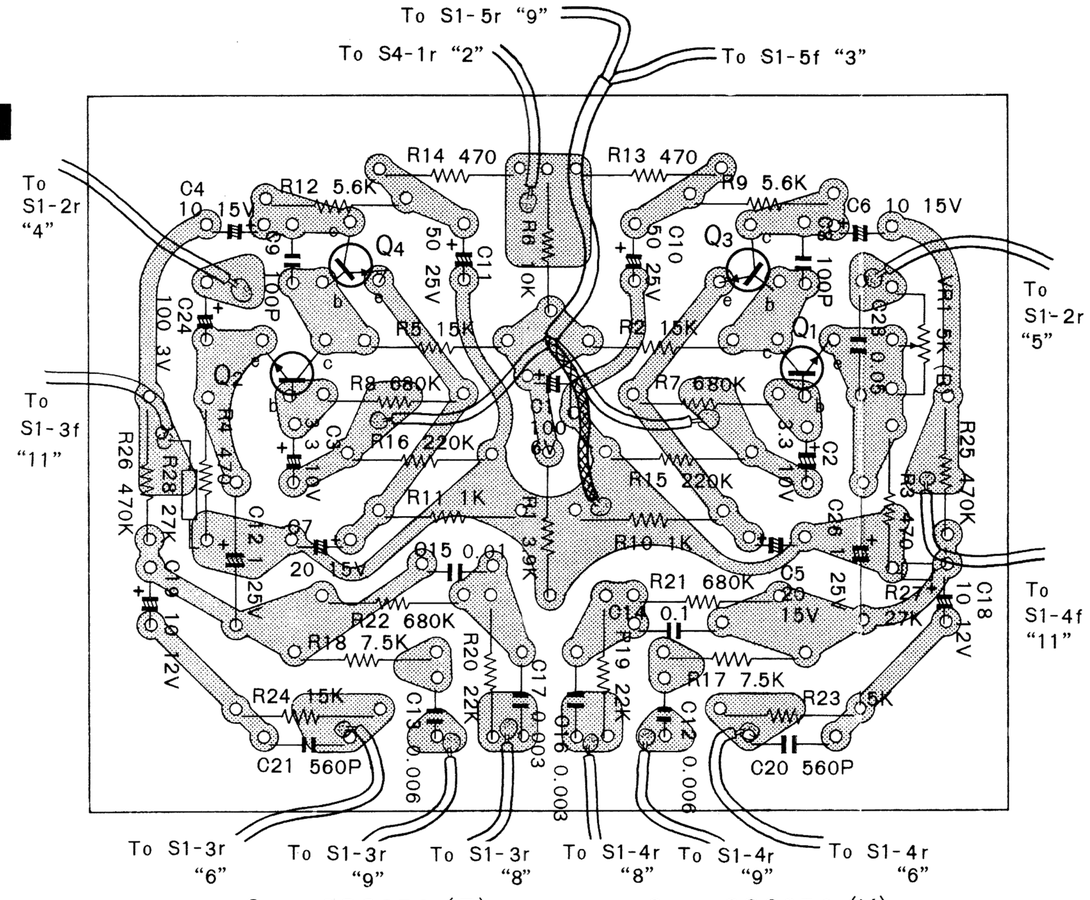

$Q_{1,2}$ 2SC350 (R)

$Q_{3,4}$ 2SC350 (Y)

$TH_{1,2}$ SDT-20 $D_{4,5}$ LV-2

Q_9 ~~2SC281 (A)~~ D_1, D_2 1N60

MAIN AMP (UAI3054) Section

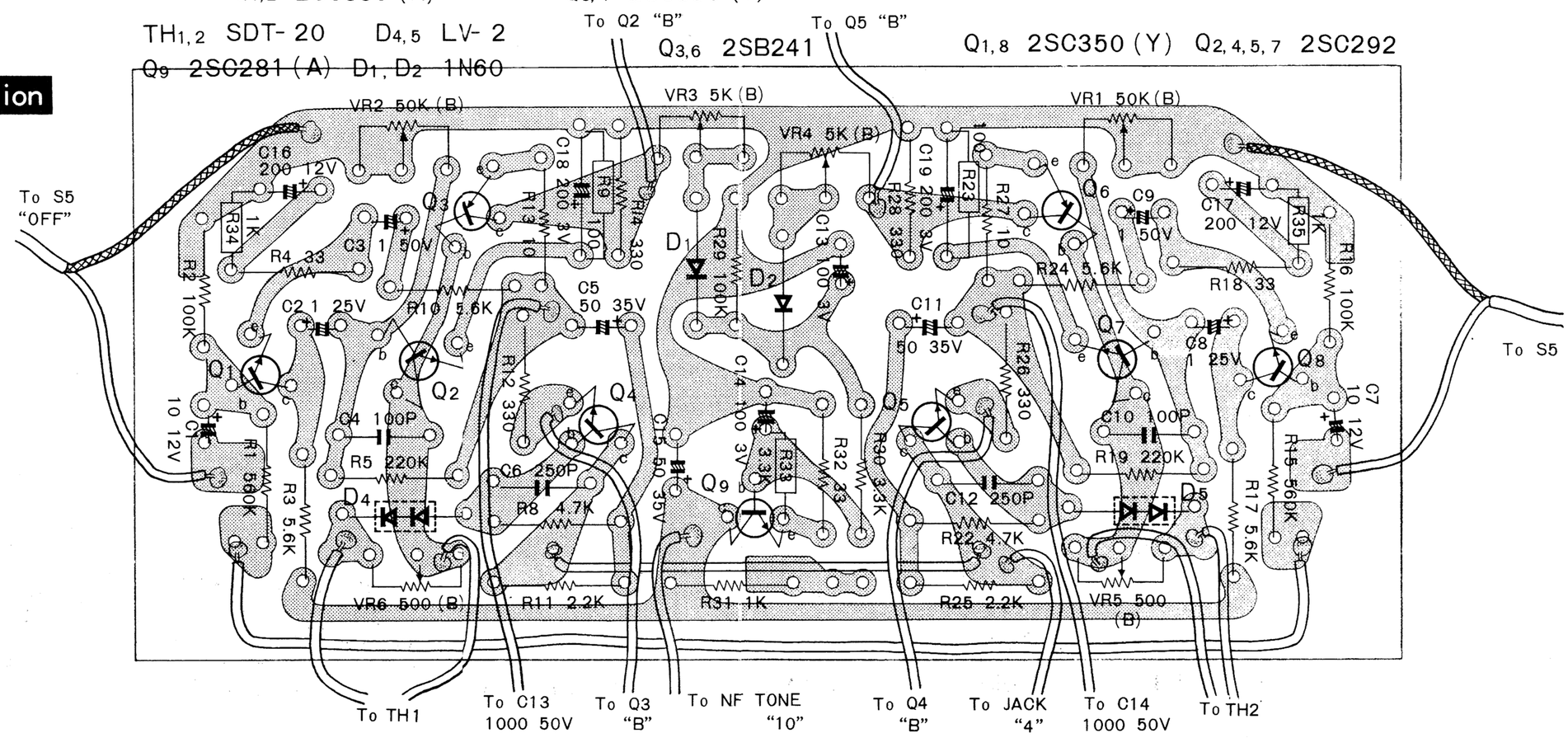

$Q_{3,6}$ 2SB241 $Q_{1,8}$ 2SC350 (Y) $Q_{2,4,5,7}$ 2SC292

SEALED CIRCUIT ASSEMBLIES-PHONTOM VIEWS

NF TONE (UA13013) Section

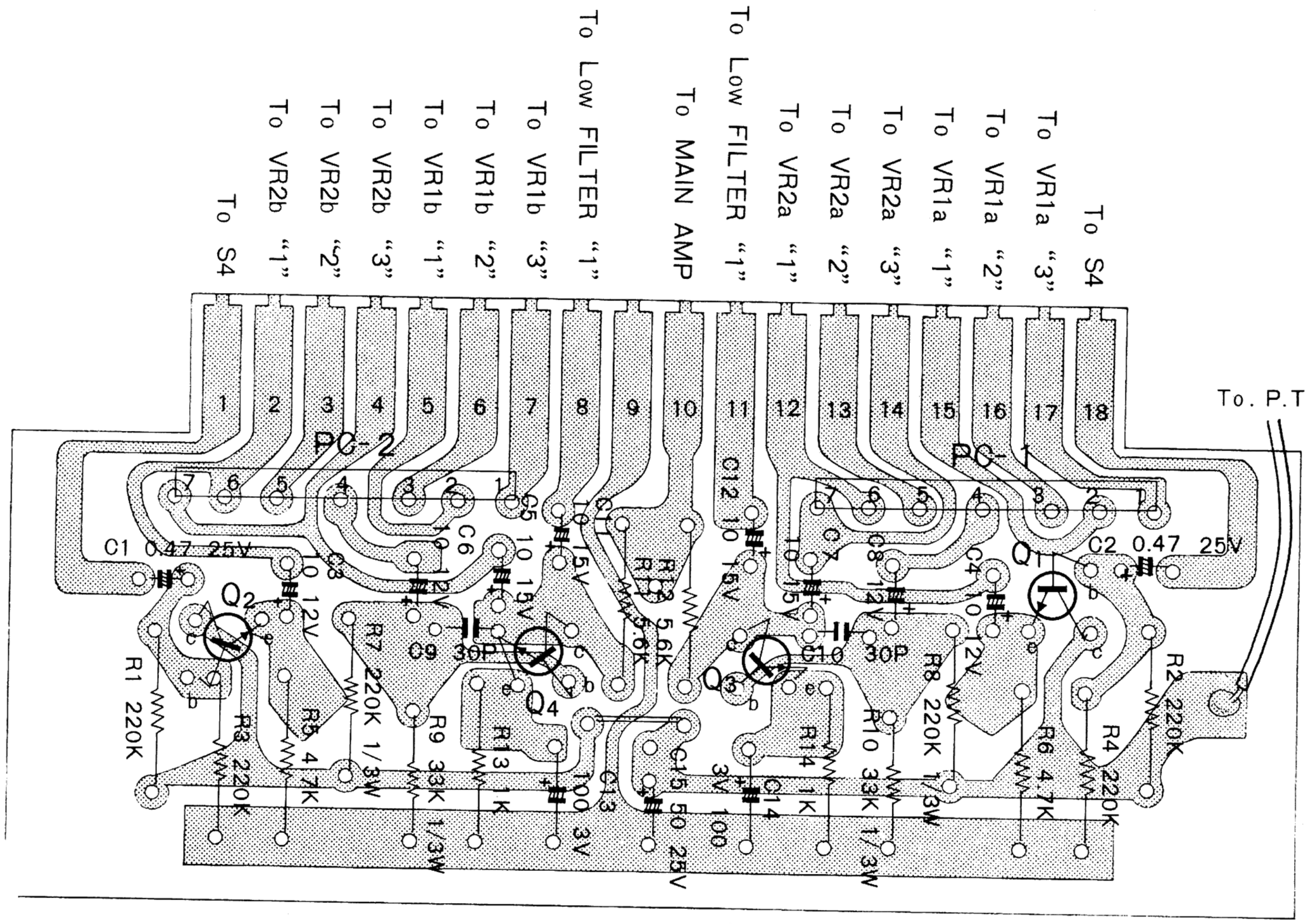

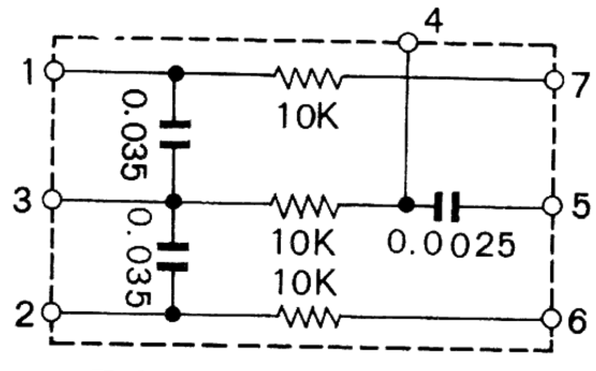

PC-1 & PC-2

$Q_{1,2}$ 2SC350 (Y)
$Q_{3,4}$ 2SC350 (R)

LOW FILTER (UA13081) Section

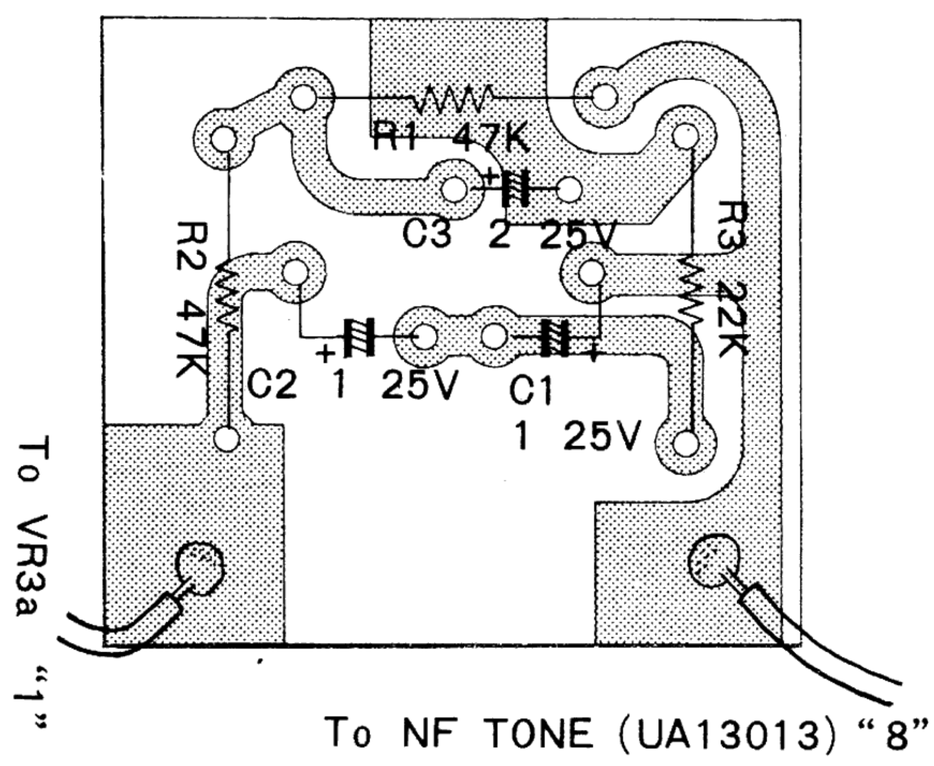

www.hifiengine.com

BLOCK DIAGRAM

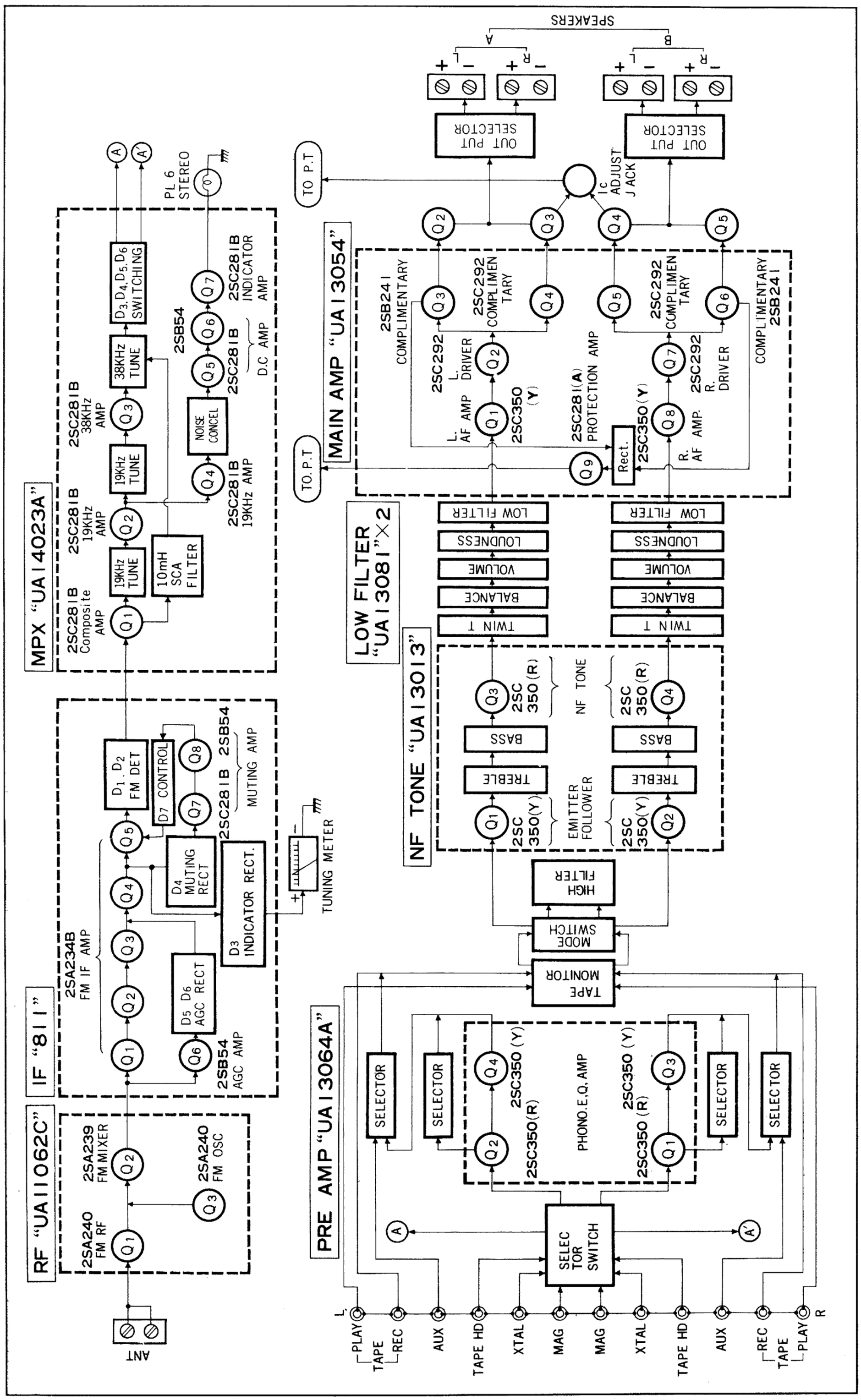

SCHEMATIC DIAGRAM

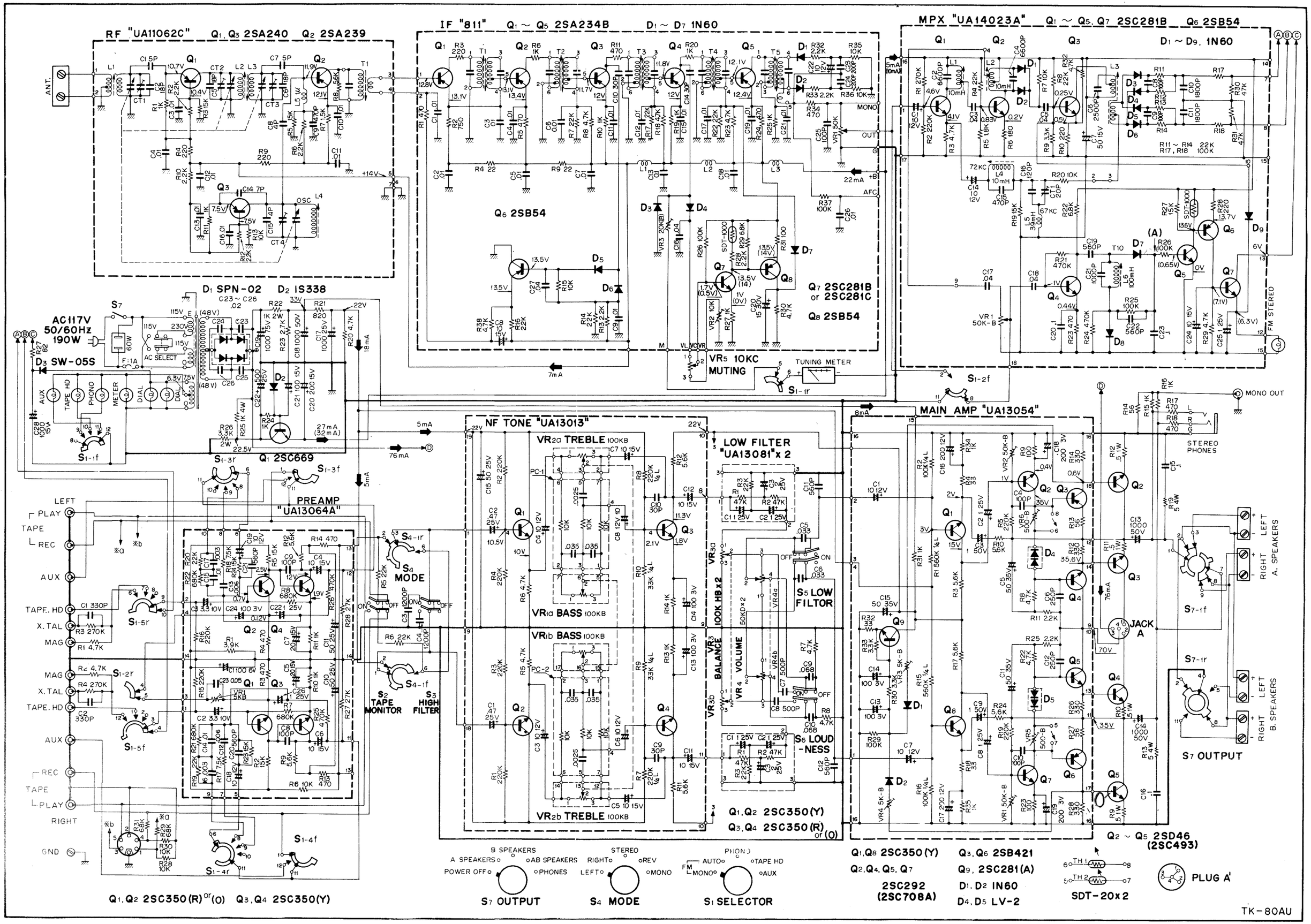

REMOVALS DISASSEMBLE

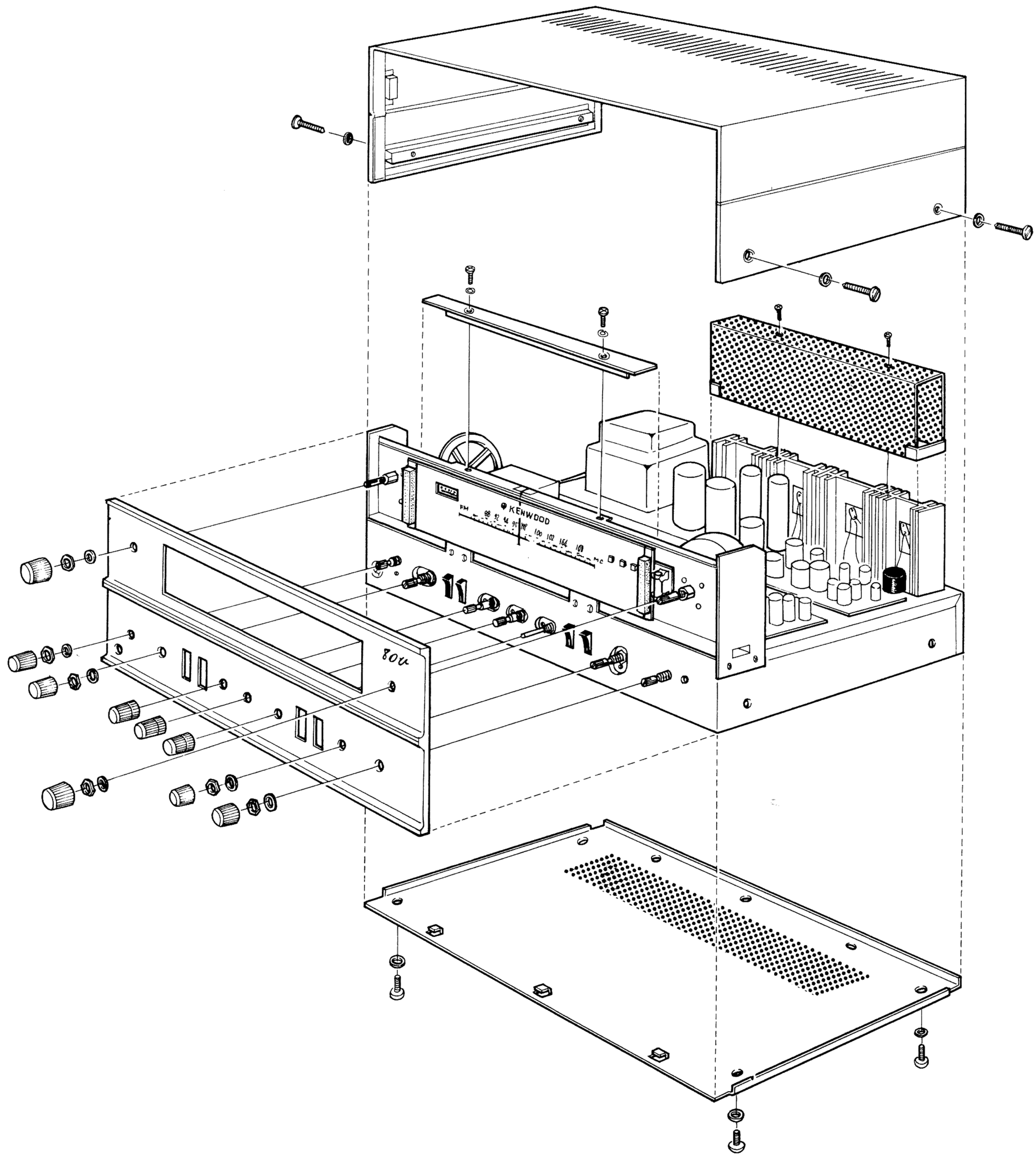

www.hifiengine.com

ALIGNMENT PROCEDURE

Please read the following notes carefully before making any alignment adjustment.

1. Generator signal : Keep the signal from signal generator always as low as possible not to get output distorted.
2. Alignment tools : Use a plastic screwdrive type alignment tool for IF transformers.
3. Dial pointer : Set dial pointer at Zero point of the logging scale on the dial.
4. MUTING control : Keep it placed in the minimum position.

FM ALIGNMENT

UNIT NO. "UA11062C" "811"

1. When using FM signal generator. Oscilloscope and VTVM.
2. Refer to FM part shown in photo for test point.

STEP	Dummy Antenna	Signal Generator Coupling	Signal Generator Frequency	Selector Switch	Tuner Dial Setting	Indicating Meter	Adjust	Remarks
1	270 ohm carbon resistor	Both side to FM antenna terminals	10.7 MHz (Unmod.)	FM	Detune to a position where there is no interference on the dial.	Tuning Indicator	P.C.B.No."UA11062C"T1 and No."811" T1~T4 Top & Bottom	Adjust for maximum Deflection
2	270 ohm carbon resistor	Both side to FM antenna terminals	98MHz (400Hz±75 KHzFM 500~1000μV)	FM	Set it to have the tuning indicator show the maximum deflection	VTVM at LEFT output jack of TAPE REC.	P.C.B.No."811" T5 Top & Bottom	Adjust for maximum Deflection
3	270 ohm carbon resistor	Both side to FM antenna terminals	88MHz (400Hz± 75KHzFM)	FM	88MHz	VTVM & crystal earphone at LEFT output jack of TAPE REC.	P.C.B.No."UA11062C" L4 L1 ~ L3	Adjust for maximum Deflection
4	270 ohm carbon resistor	Both side to FM antenna terminals	106MHz (400Hz± 75KHzFM)	FM	106MHz	VTVM & crystal earphone at LEFT output jack of TAPE REC.	P.C.B.No."UA11062C" CT3 CT1 CT2	Adjust for maximum Deflection (*)
5	Repeat 3 & 4 until no further improvement is possible							

(*) Confirm the presence of 400 Hz signal with crystal earphone.

www.hifiengine.com

ALIGNMENT PROCEDURE

FM MULTIPLEX ALIGNMENT

UNIT NO. "UA11062C" "811" "UA14023A" "UA13064A"

1. When using FM Stereo Generator, Audio Signal Generator, Oscilloscope and VTVM.
2. Refer to MPX part shown in photo for test point.

STEP	Audio Signal Generator Coupling	Audio Signal Generator Frequency	Selector Switch	Connect VTVM & Oscilloscope	Horizontal Selector Switch Position of Oscilloscope	Adjust	Remarks
SCA Filter Coil Alignment							
1	High side to MPX Point "1" Low side to chassis	72 KHz (0.5V)	FM MONO	High side to MPX Point "2" or "3" Low side to chassis	"INT" SWEEP	P.C.B. No. "UA14023A" L4	Minimum Deflection
2	High side to MPX Point "1" Low side to chassis	67 KHz	FM MONO	High side to MPX Point "2" or "3" Low side to chassis	"INT" SWEEP	P.C.B. No. "UA14023A" CT1	Minimum Deflection
19 KHz Tuning Coil Alignment							
3	High side to MPX Point "1" Low side to chassis	19 KHz (0.2V)	FM MONO	High side to MPX Point "4" Low side to chassis	"INT" SWEEP	P.C.B. No. "UA14023A" L1 L2 top & bottom	Maximum Deflection
38 KHz Oscillator Coil Alignment							
4	To Horizontal input of Oscilloscope	19 KHz (1V)	FM AUTO-MATIC	High side to MPX Point "2" or"3" Low side to chassis	H. Amp	P.C.B. No. "UA14023A" L3	Adjust until a perfect sine curve of 400 Hz can be obtained on Oscilloscope

FINAL ALIGNMENT

(When using FM Generator)

Signal generator Setting, Output Voltage: 100 µV
Deviation: 67.5 KHz at A+B Signal

STEP	FM Stereo Generator				Selector Switch	Connect VTVM & Oscilloscope	Adjust	Remarks
	Coupling	Modulation Frequency	Input Selector	19 KHz Pilot Carrier Switch				
5	Both side to FM ANT. terminal	2 KHz	A or LEFT	ON	FM AUTOMATIC	Right "TAPE REC"	VR1 on "UA14023A"	Minimum Deflection
6	Both side to FM ANT. terminal	2 KHz	B or RIGHT	ON	FM AUTOMATIC	Left "TAPE REC"	VR1 on "UA14023A"	Minimum Deflection
Stereo Indicator Section Alignment								
7	Both side to FM ANT. Terminal	OFF	OFF	ON	FM AUTOMATIC	High side to (A) Low side to chassis	P.C.B.No. "UA14023A" L6	Maximum Deflection
8	Both side to FM ANT. Terminal	ON	A+B or LEFT + RIGHT	ON	FM AUTOMATIC	LEFT or RIGHT output	P.C.B. No. "UA14023A" VR1	Feed in an input that is 2dB down the flat level of input sensitivity characteristic curve, and adjust the indicator to be operative.

www.hifiengine.com

PROCEDURE FOR REPLACING OUTPUT TRANSISTOR

Symptoms:

A. Load hum in the speaker.
B. Power transistors, 2SD-46 heats up.
C. 0.5 ohm resistor R9, R10, R11 and R12 heats up.

Replacing method:

A. Replace the entire four transistors, 2SD-46 (SONY), with either four new 2SC493(Toshiba), RCA2N-3055.

Testings:

When replacement is completed, do not operate the unit without first testing the set. Perform the testing according to the following procedure:

1. With a variable transformer lower the AC line voltage to approximately 30 volts.

2. Using a tester, measure the voltage between the chassis and "c" of the power transistors Q2 and Q3 (or Q4 and Q5). If approximately 1/2 of the voltage at Q3 equals that at Q2, voltage is normal.

3. If approximately 1/2 of the voltage at Q3 equals that at Q2, then gradually raise the line voltage until it becomes 117V and then measure the voltages again. If they should read 70V and 35V approximately, they are normal.

Adjustments:

Connect dummy load to 8 ohm output terminals, and connect the oscilloscope input in parallel.
Set audio generator at 100mV 1000 Hz and connect to the AUX terminals.
Advance the front panel Volume control until the sine-wave just begins to clip on the oscilloscope. Adjust balance control VR2 (left) or VR1 (right) on the print board "UA13054" until clipping is symmetrical.

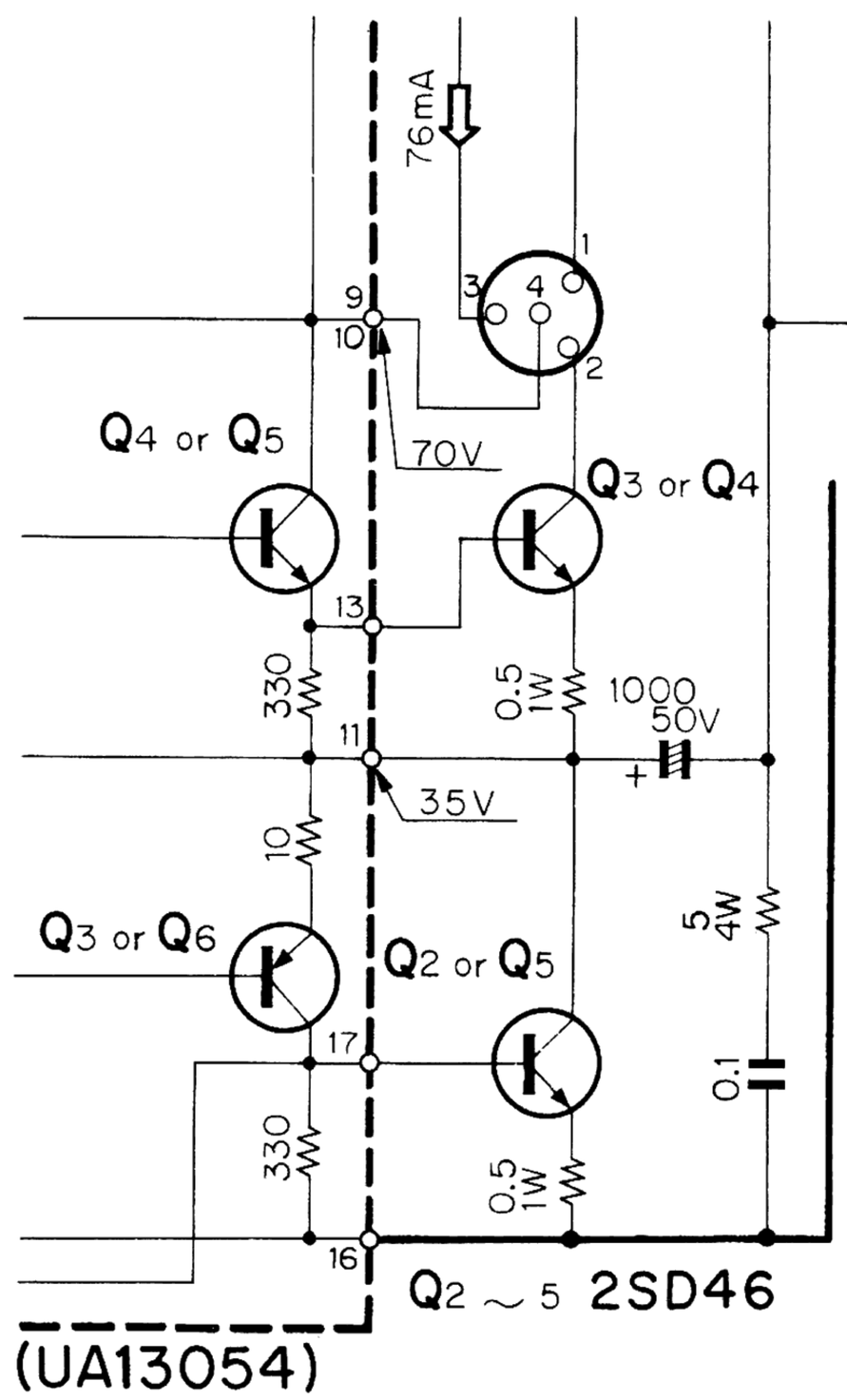

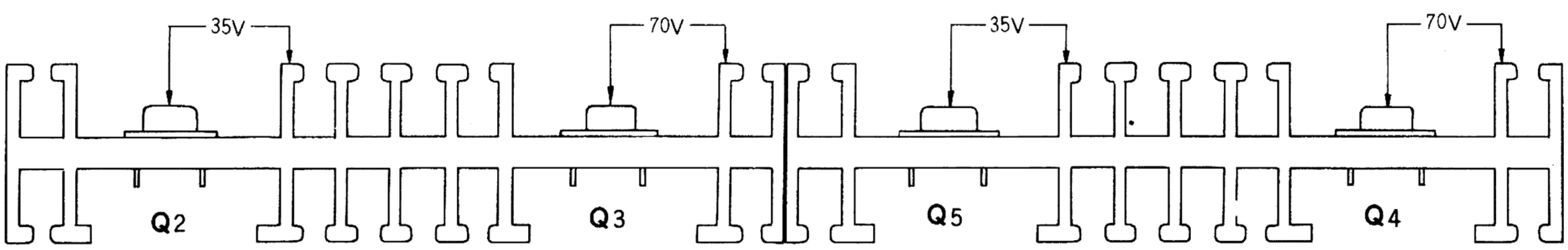

www.hifiengine.com

DIAL CORD STRING

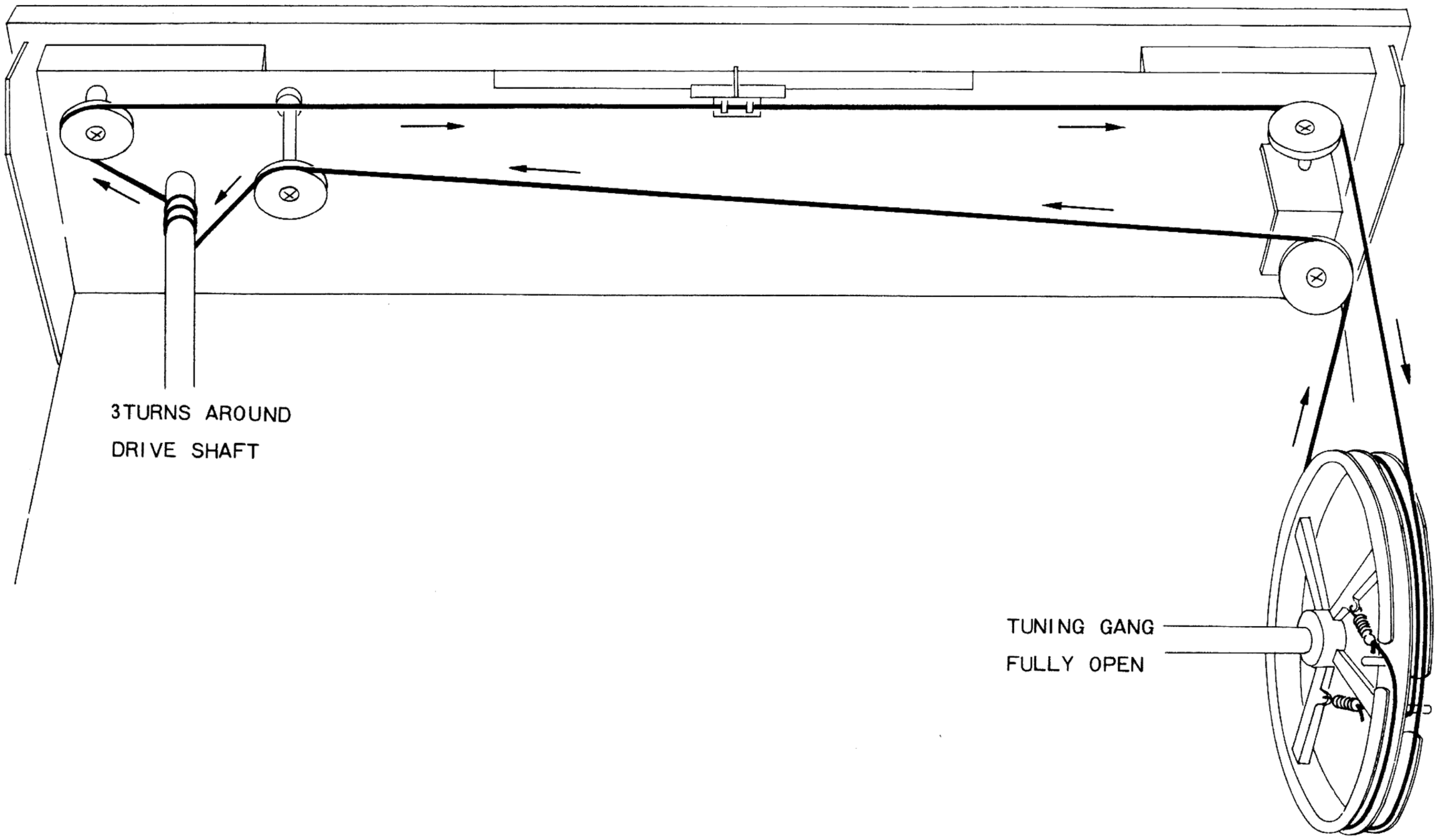

www.hifiengine.com

TRIO

Manufactured by TRIO CORPORATION, TOKYO, JAPAN.

www.hifiengine.com