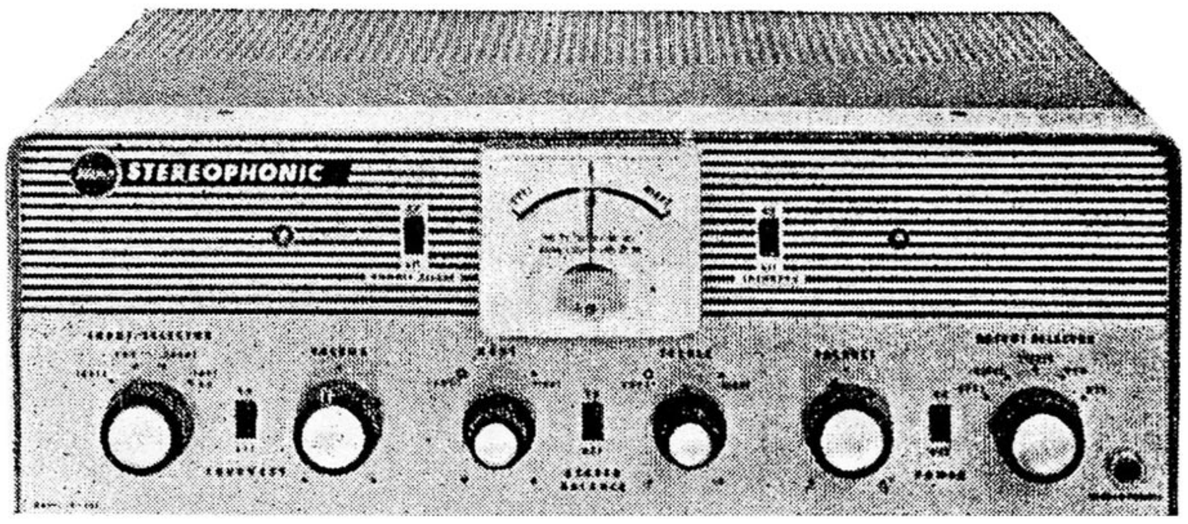

TRIO
DELUXE STEREO PRE-MAIN AMPLIFIER
Model W-45A

FEATURES

1. The W-45A has a powerful output of 18 watts for each channel and 36 watts for monaural operation.
2. Hum is entirely eliminated by the Direct Current Filament Heating System adopted in the equalizer circuit.
3. New Type Balance Meter helps quick and accurate balancing between the two channels.
4. Rumble Filter completely eliminates annoying low level disturbance.
5. Loudness Control assures realism such as experienced only at concert halls, even when volume is set at a low level.
6. Clutch Type Tone Controls adjust tone separately or simultaneously.
7. Stereo head-phone can be connected.
8. Speaker Phasing Switch brings right and left speakers back into phasing position, if speakers are connected out of phase.

SPECIFICATIONS

Tubes Used: 12AX7 x 4, 12AU7 x 2, 6BQ5 x 4, 5AR4, OA-79 x 2, total, 13 tubes.

Output Power: 18W x 2 (harmonic distortion less than 1%) monaural, 36W.

Frequency Response: ± 1 dB 20-40,000.

Input: Mag: 15 W with input of 3 mV. Tape HD: 15 W with input of 4 mV. Tuner: 15 W with input of 145 mV. Aux: 15 W with input of 145 mV.

Tone Control: 50 c/s, + 13 dB — 12.5 dB; 10 Kc, + 13 dB — 16 dB.

Loudness Control: 50 c/s + 16 dB, 10 Kc + 2.5 dB with volume control at — 30 dB.

Equalizer: RIAA (LP record) NARTB (tape recorder).

Residual Noise: 2.0 mV (Aux) 30 mV (Mag) 20 mV (Tape HD) maximum volume, tone control flat.

Output Terminals: 4, 8, 16 ohms (pair of each).

Special Circuit: Balance Meter, Rumble Filter, Loudness Control.

Power Source: 250 V, 50-60 c/s.

Dimensions: Width 15⅜"; Height 5⅜"; Depth 11½".

Weight: 24 lbs.

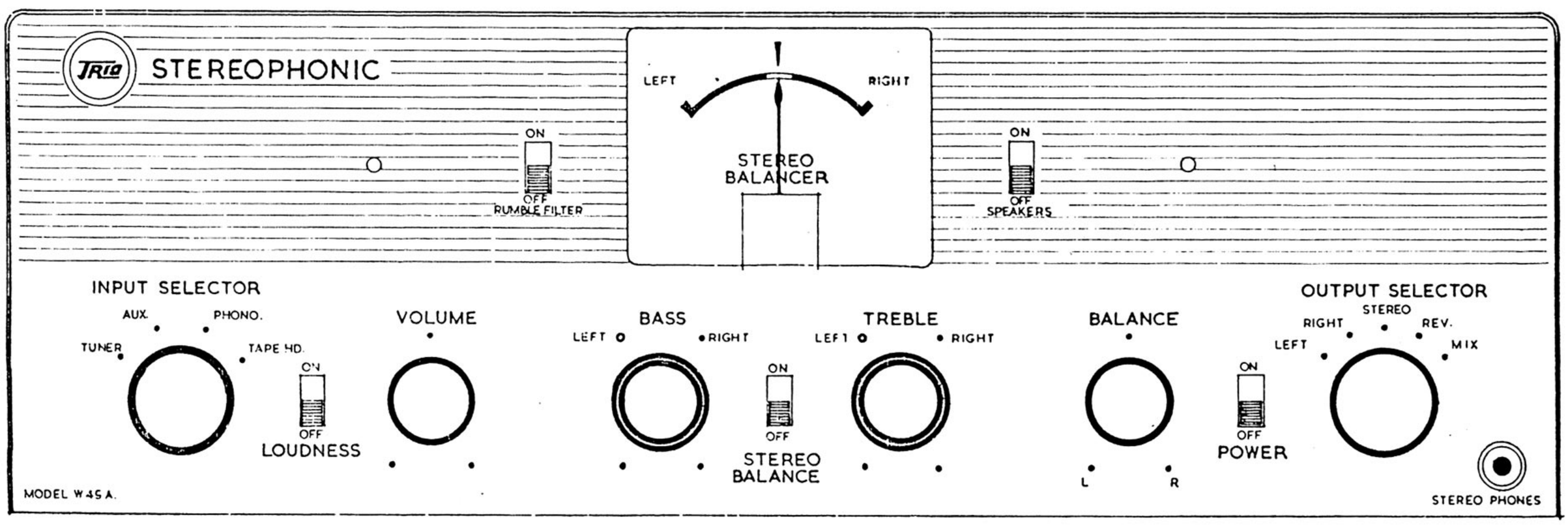

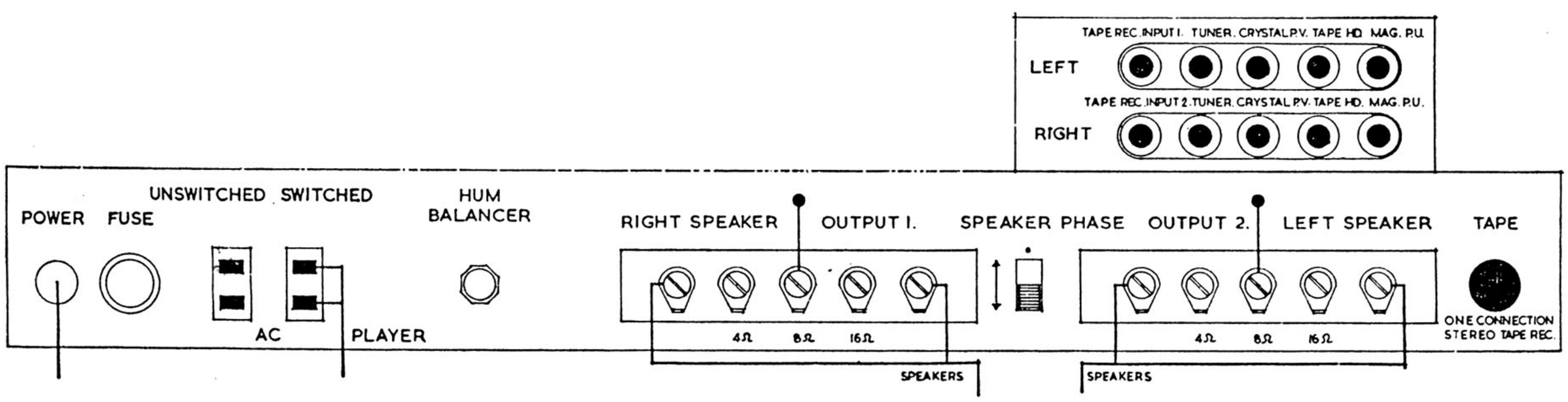

Sole Australian Importers & Distributors

BARDSLEY IMPORT TRADING CO.

• 166d GLEBE ROAD, GLEBE, N.S.W. PHONES MW 1453 - MW 4283 •

ARROW ELECTRONICS

422 Kent Street

SYDNEY

www.hifiengine.com

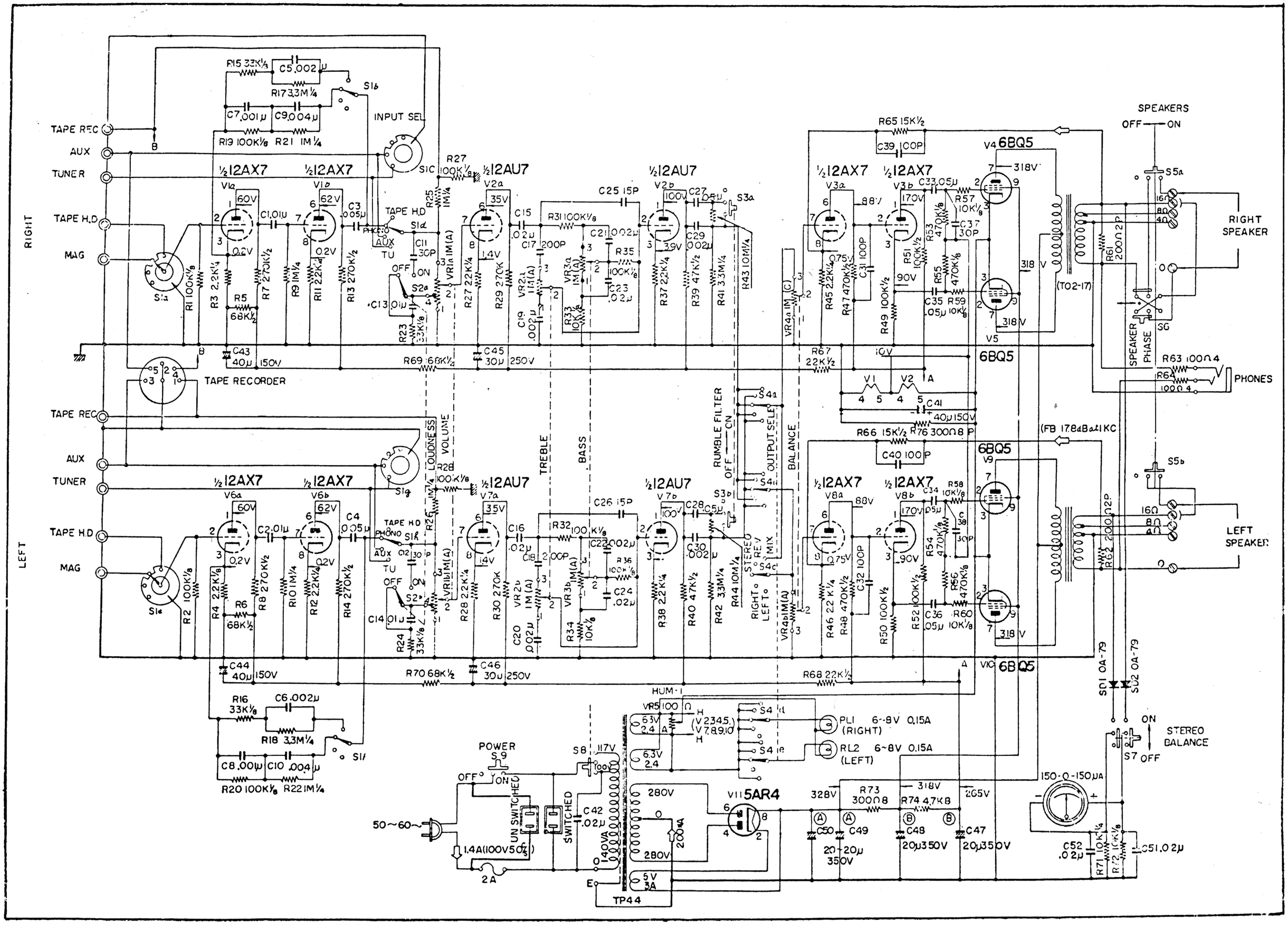
RIGHT
LEFT
TAPE REC
AUX
TUNER
TAPE H.D
MAG
TAPE RECORDER
INPUT SEL
½12AX7
½12AU7
6BQ5
V5
V9
V10
V11 5AR4
SPEAKERS
OFF ON
RIGHT SPEAKER
LEFT SPEAKER
SPEAKER PHASE
PHONES
(TO2-17)
(FB 17.8dB at 1KC
LOUDNESS
VOLUME
TREBLE
BASS
RUMBLE FILTER
OUTPUT SELECT
BALANCE
STEREO REV MIX
RIGHT LEFT
STEREO BALANCE
POWER S.9
UN SWITCHED
SWITCHED
50~60~
1.4A(100V50~)
2A
140VA
2004A
TP44
HUM-1
PL1 6~8V 0.15A (RIGHT)
RL2 6~8V 0.15A (LEFT)
150-0-150μA
SD1 OA-79
SD2 OA-79

W - 45

AMPLIFICATORE STEREOFONICO PROFESSIONALE

10-30.000 cps. ± 1 dB - 18 + 18 watt (12 + 12 indistorti) su 4, 8, 16 ohm - Sensibilità 2 mV FONO, 2 mV TESTINA NASTRO, 150 mV RADIO e AUSIL. - Comando Bassi e Acuti (± 15 dB) indipendenti sui due canali - Compensazione fisiologica - Presa Cuffia - Filtro antirombo - Strumento di controllo della potenza emessa e del bilanciamento - Ronzio —90 dB 20 funzioni di valvola - Dimensioni mm 390 × 135 × 300.

Prezzo Listino Lit. 140.000