Majestic Radio & Television Corporation

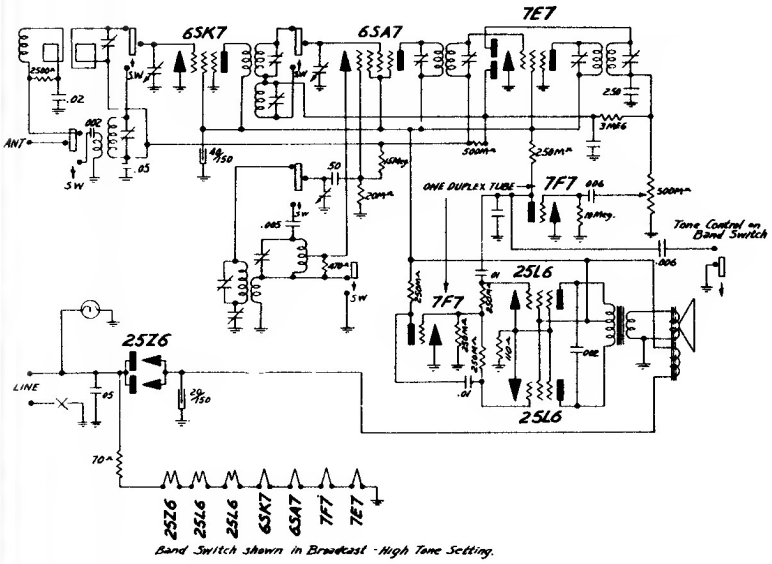

Band Switch shown in Broadcast - High Tone Setting.

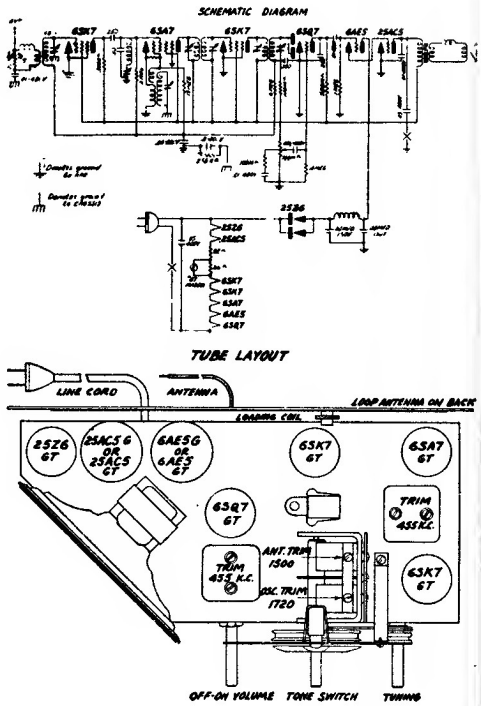

MODEL 7K60

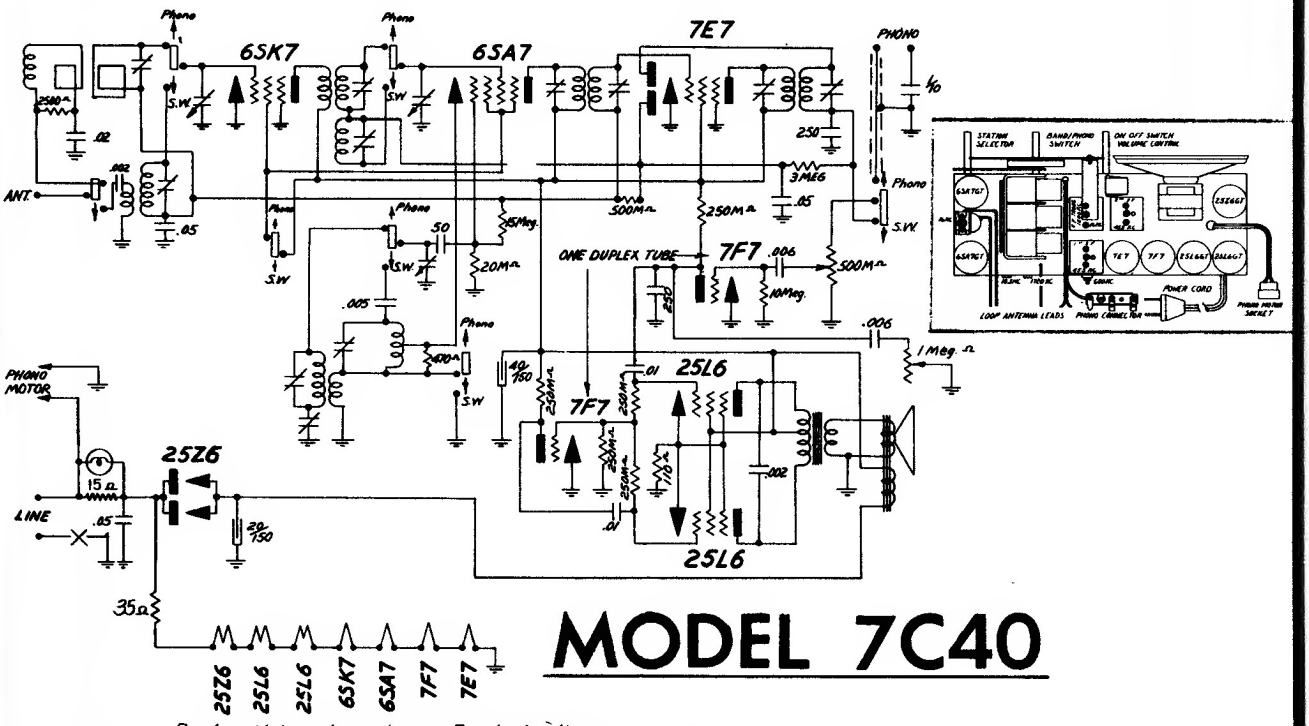

Band switch sections shown in Broadcast setting.

MODEL 7C40