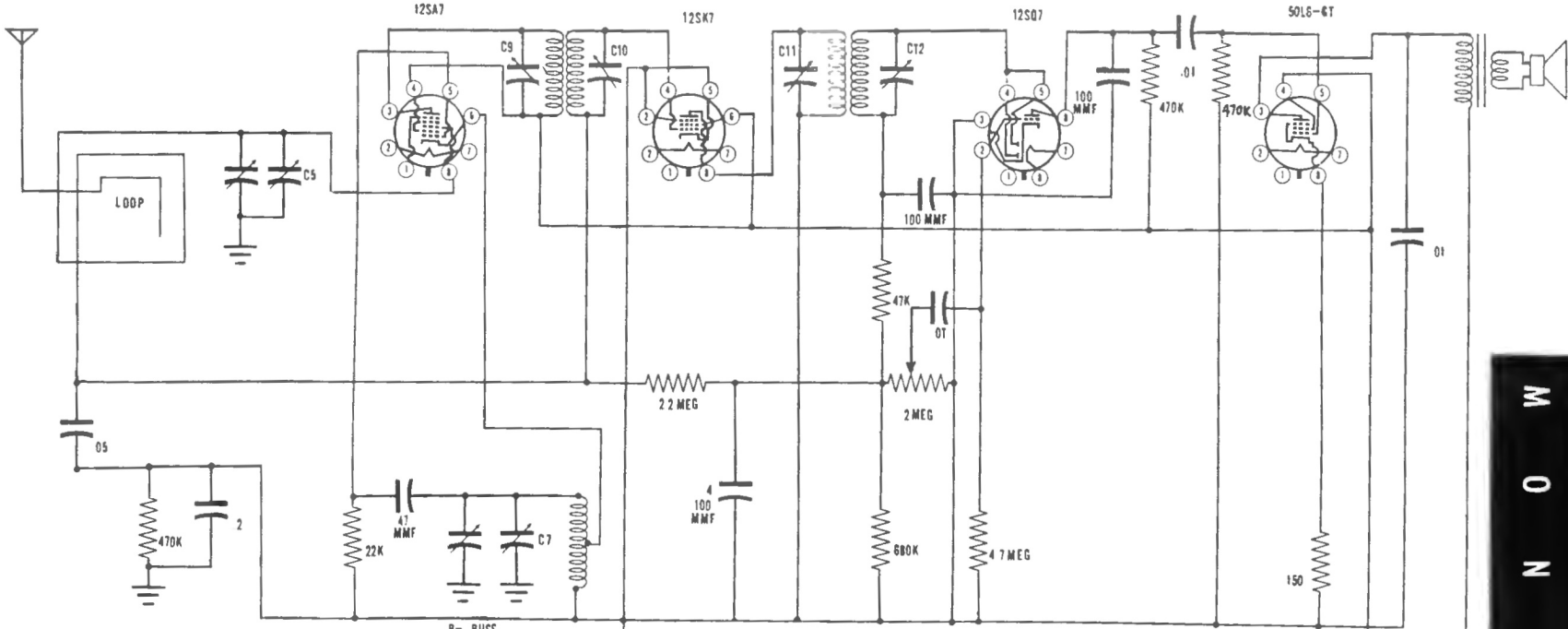

INTERMEDIATE FREQ.. ... . 455 K.C.

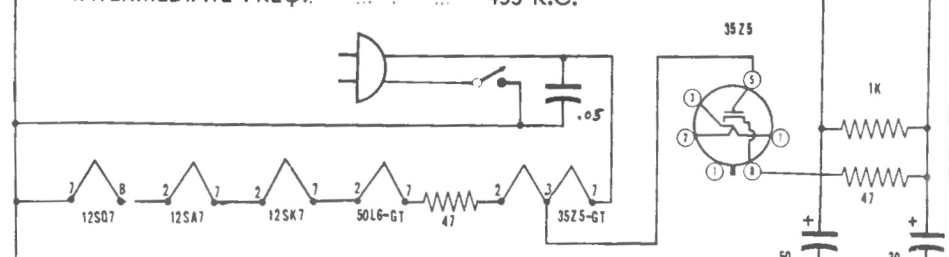

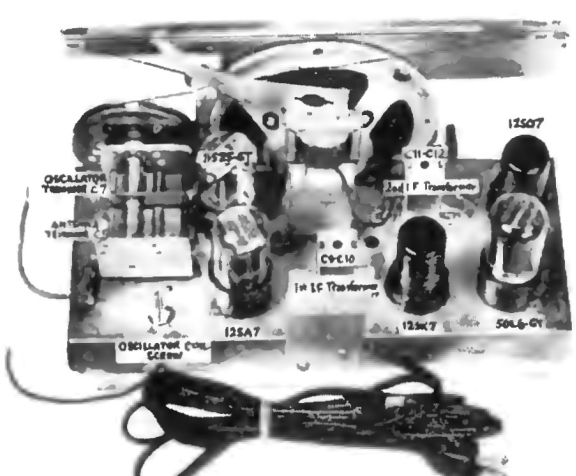

C10 is located on bottom of 1st I.F. Transformer.
C12 is located on bottom of 2nd I.F. Transformer.

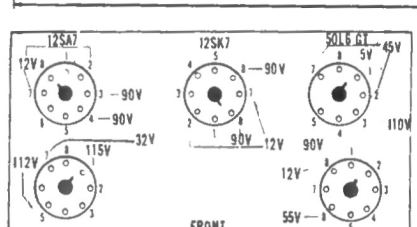

BOTTOM VIEW

ALL VOLTAGES MEASURED BETWEEN B- BUSS AND POINTS INDICATED

Airline
TABLE RADIO
MODEL
15GHM-1552A

MONTGOMERY WARD