WARDS

MODEL 64 WG-2500B

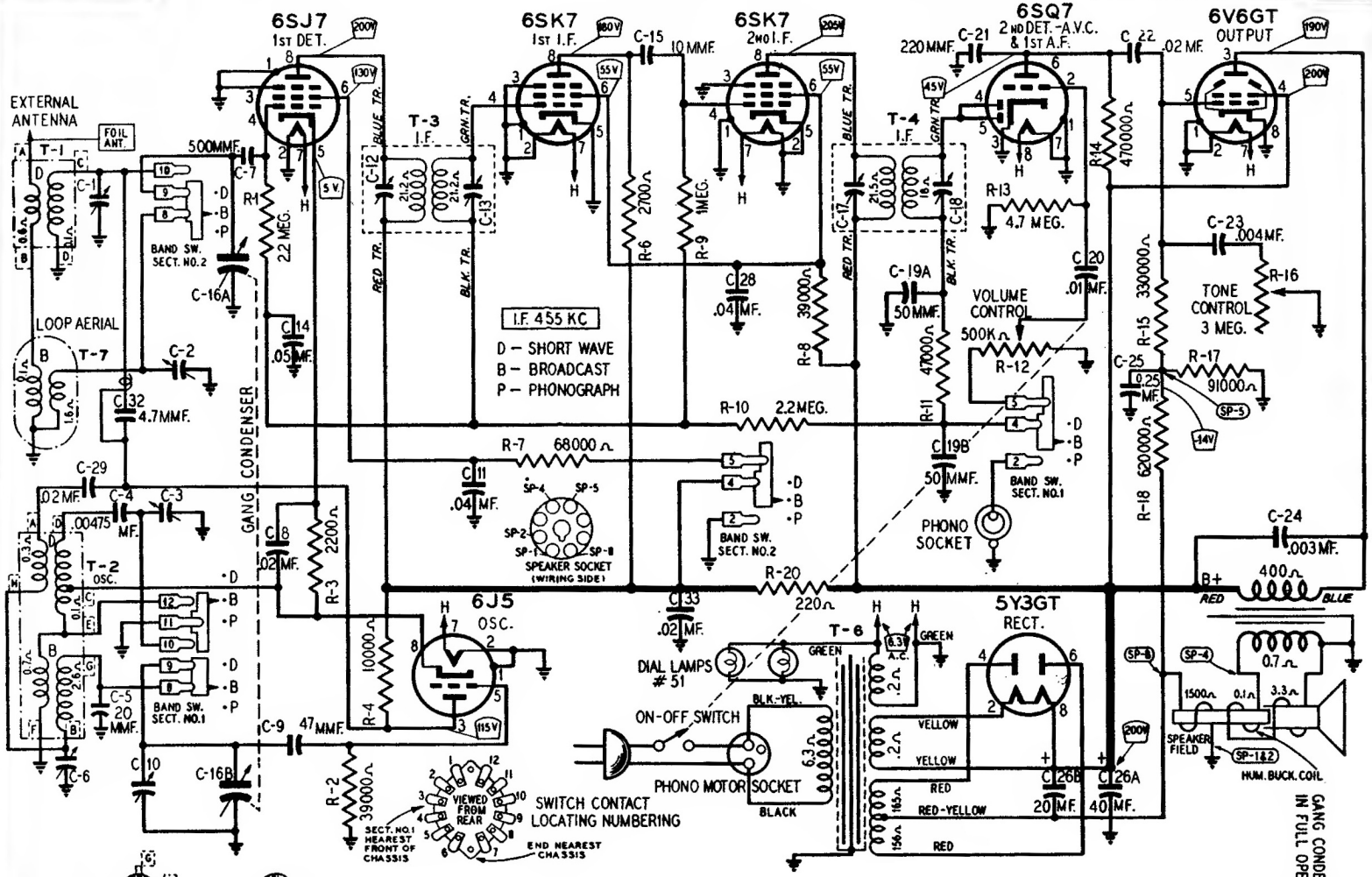

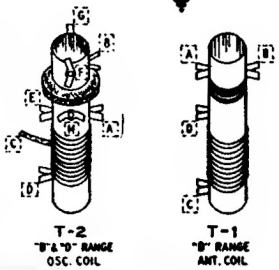

TUBE SOCKET VOLTAGES

Socket voltages are shown on the schematic diagram at the tube socket terminals. All voltages are between the socket terminal and chassis ground.

The readings were taken with a 1000 ohm per volt meter and all plate and screen voltages read on a 500 volt scale.
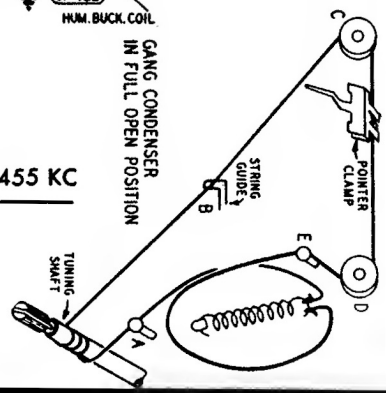
Intermediate Frequency . 455 KC