Motorola

Model 501, with self-contained speaker, is exactly as per diagram.

Model 601, differs only in the use of an external loud-speaker.

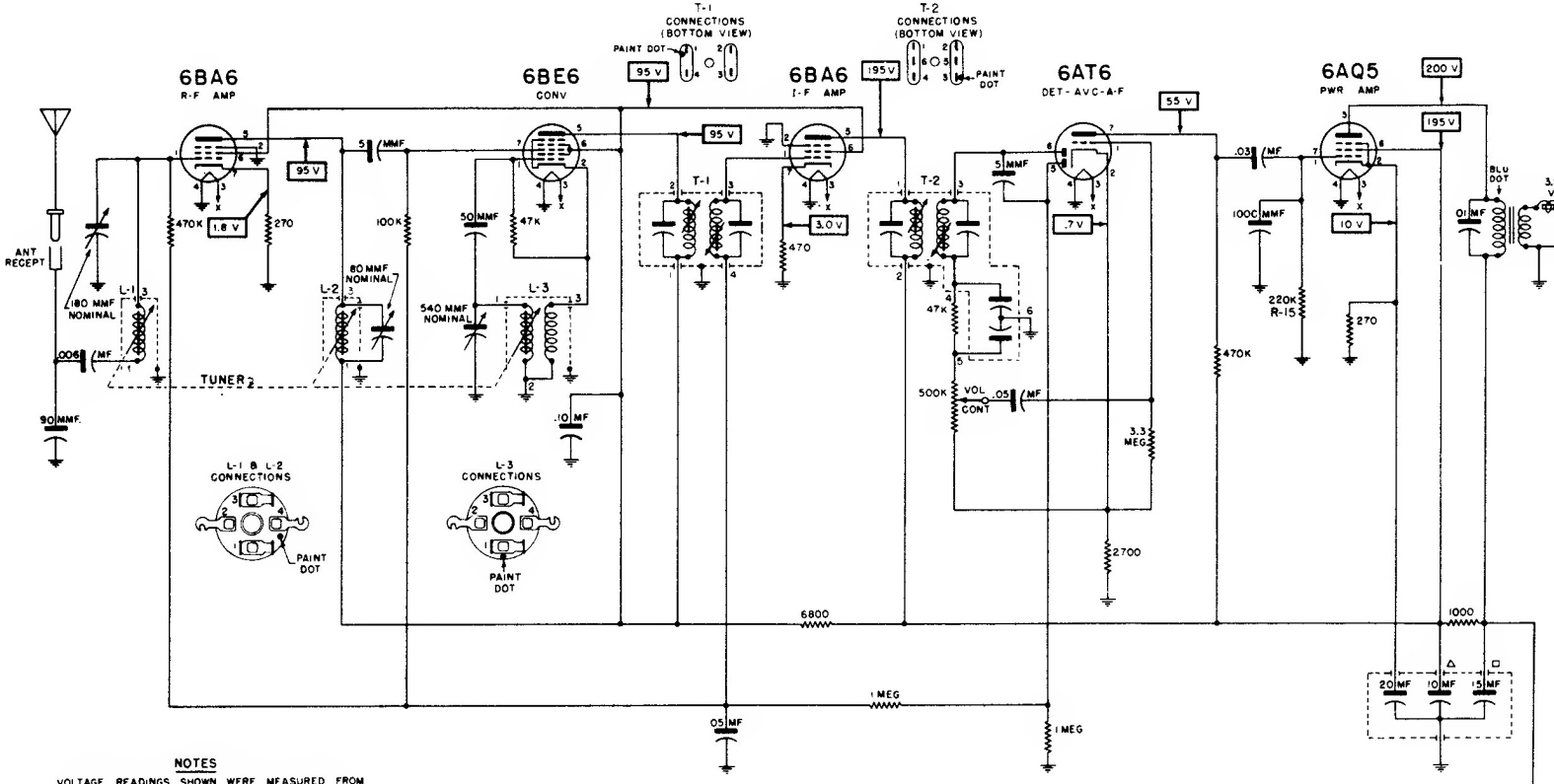

NOTES

VOLTAGE READINGS SHOWN WERE MEASURED FROM POINT INDICATED TO CHASSIS WITH A VTVM
NO SIGNAL WAS TUNED IN
INPUT VOLTAGE WAS 6.3V DC AT BAT RECEPTACLE.
VOLTAGE TOLERANCE ±10%

ALL RESISTORS INDICATED IN OHMS
K=ONE THOUSAND (1000) OHMS

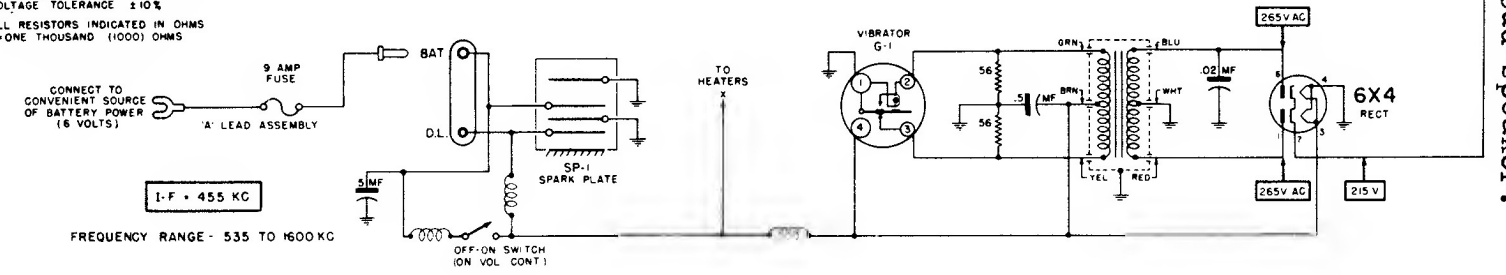

I-F = 455 KC

FREQUENCY RANGE - 535 TO 1600 KC