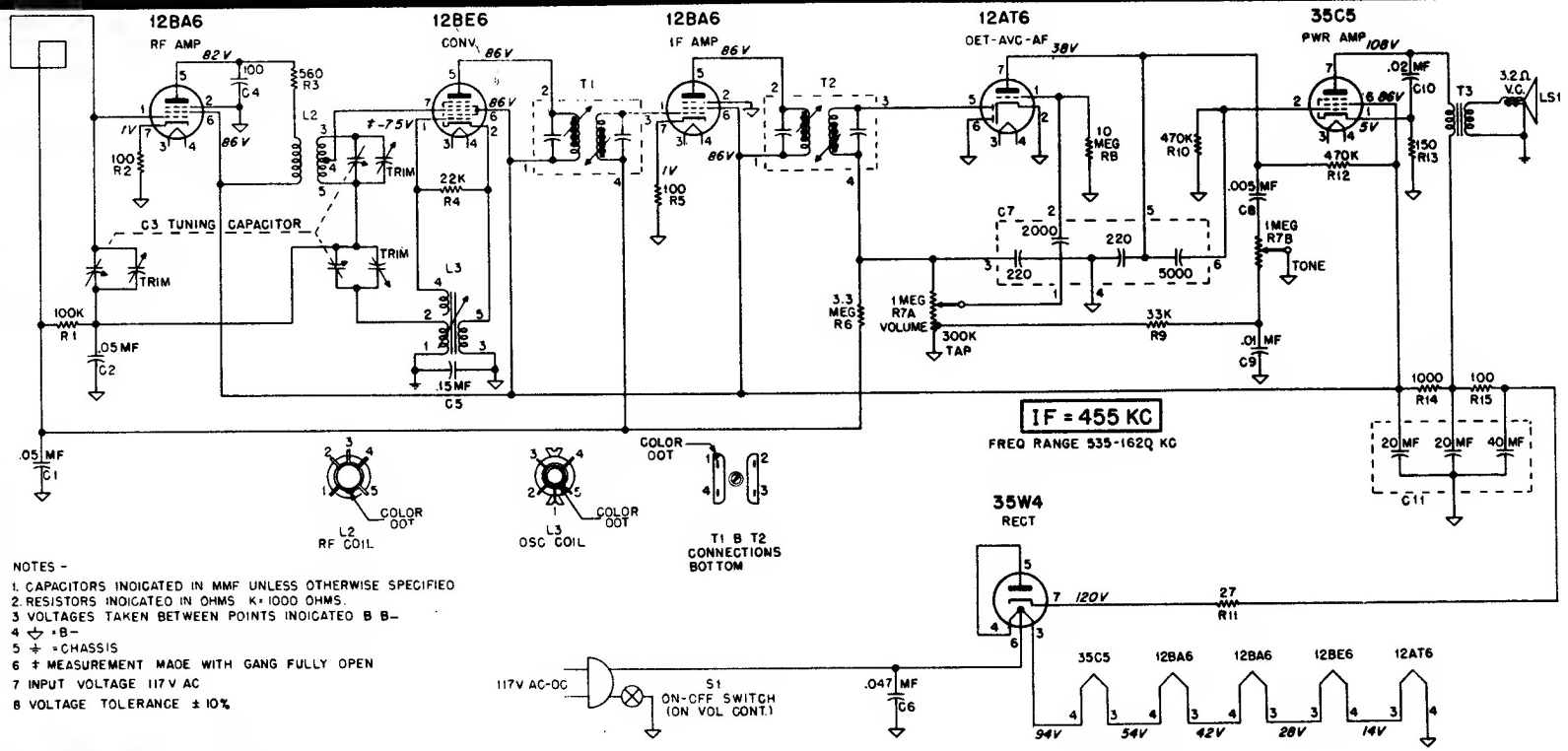

NOTES -

1. CAPACITORS INDICATED IN MMF UNLESS OTHERWISE SPECIFIED
2. RESISTORS INDICATED IN OHMS K=1000 OHMS.
3. VOLTAGES TAKEN BETWEEN POINTS INDICATED B B-
4. ⏚ = B-
5. ⏚ = CHASSIS
6. ‡ MEASUREMENT MADE WITH GANG FULLY OPEN
7. INPUT VOLTAGE 117 V AC
8. VOLTAGE TOLERANCE ± 10%

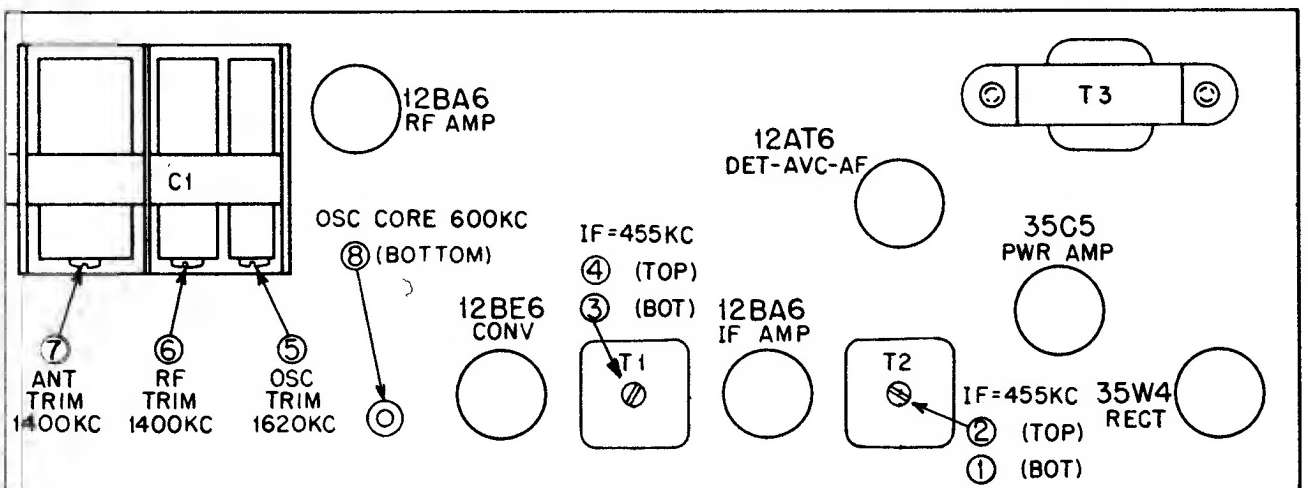

MOTOROLA, INC.

MODELS
63X1
63X1A
63X2
63X3
CHASSIS
HS-335