NATIONAL UNION RADIO CORPORATION

N. U. "PRESENTATION" RADIO

MODEL G-619

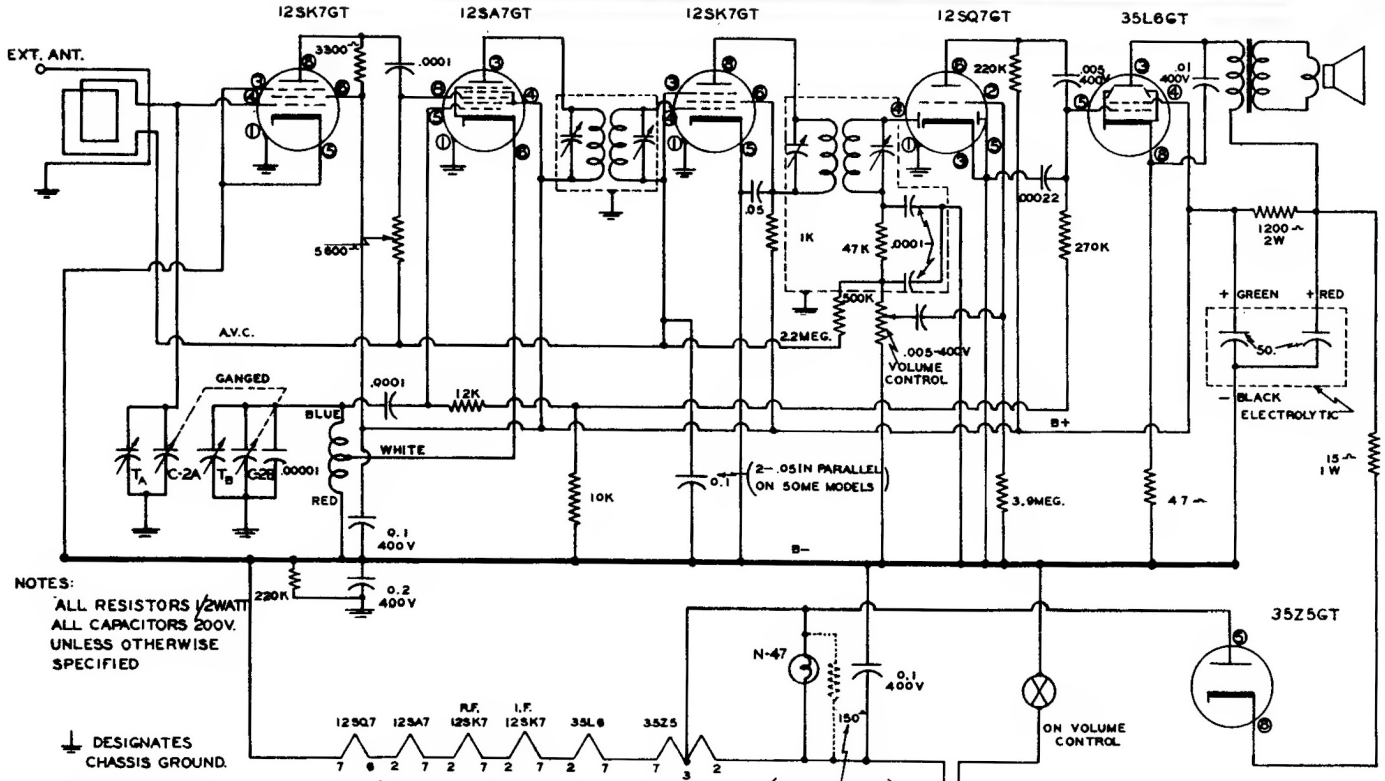

NOTES:
ALL RESISTORS 1/2WATT
ALL CAPACITORS 200V.
UNLESS OTHERWISE SPECIFIED

HUM MODULATION:

On Early Production runs Condenser C-18 consisted of two — .05 mfd. units. One ground terminal was connected to CHASSIS, the other to B—. Disconnect the CHASSIS terminal of the .05 Condenser now connected to Pin No. 1 of the 12SA7GT tube and connect this lead to Pin No. 5 of either of the 12SK7GTs or to any other convenient B— point. This effectively by-passes the A.C. Modulation hum to B— instead of to Chassis.

OSCILLATION:

Remove one side of Resistor R-2 (in grid circuit of 12SA7GT) now connected to A.V.C. bus and reconnect to cathode (#5 pin) of I.F.—12SK7GT.

AVERAGE VOLTAGES*

PIN NO.	R.F. 12SK7GT		CONV. 12SA7GT		I.F. 12SK7GT		DET. 12SQ7GT		POW. AMP. 35L6GT		RECT. 35Z5GT	
	A.C.	D.C.	A.C.	D.C.	A.C.	D.C.	A.C.	D.C.	A.C.	D.C.	A.C.	D.C.
1	Zero		Zero		Zero		Zero		Zero		Zero	
2	25.0		13.0		37.0			—0.65	51.5		117.0	
3	Zero			72.0		—0.6	Zero			91.0	111.0	
4		—0.6		72.0		—0.6		—0.55		72.0	Zero	
5	Zero			—5.2	Zero		Zero			—0.4	111.0	
6		72.0	Zero			64.0		55.0		—2.1	Zero	
7	37.0		25.0		51.5		Zero		85.5		85.5	
8		43.0		—0.55		64.0	13.0			1.3		96.0

*Because of the many variables that may enter into voltage measurements it is impractical to indicate ABSOLUTE values of voltage. Readings must necessarily be AVERAGE voltages and even these are subject to a ±10% variation.

A.C. measurements shown are at 1,000Ω/volt.

Readings are taken from SOCKET PINS TO COMMON NEGATIVE while viewing socket from the BOTTOM.

D.C. measurements shown are at 20,000Ω/volt.

Volume Control set at MINIMUM.
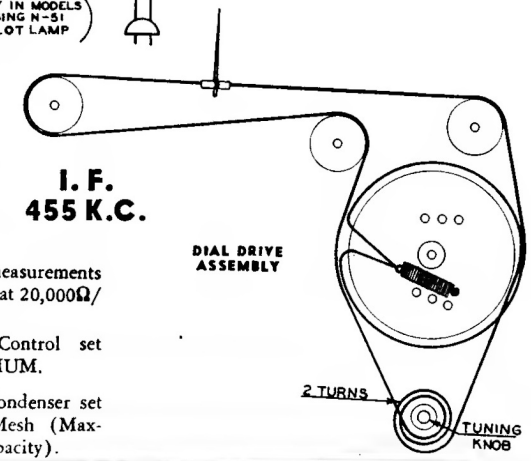
Tuning Condenser set at Full Mesh (Maximum Capacity).