Packard-Bell

SERVICE BULLETIN

MODEL 551

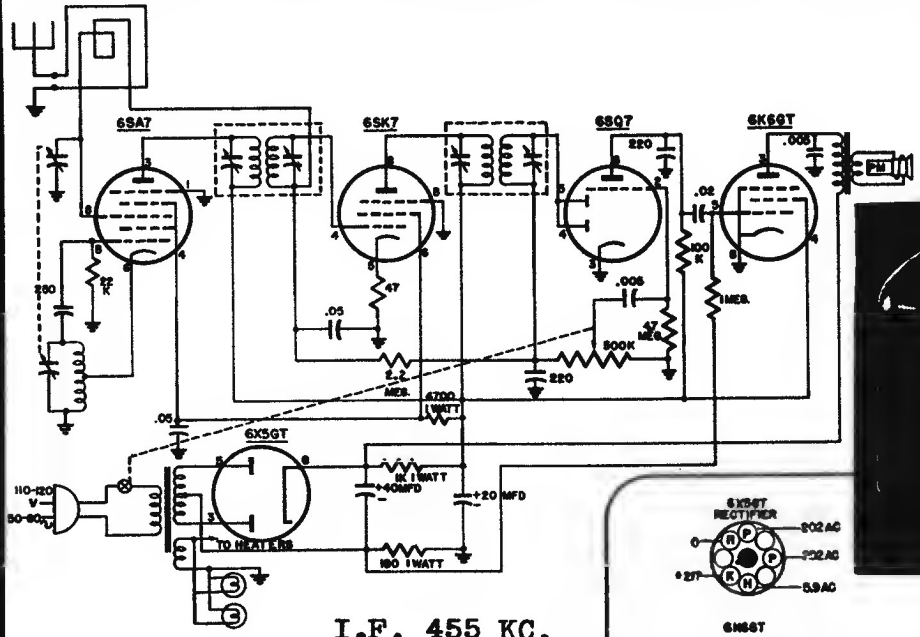

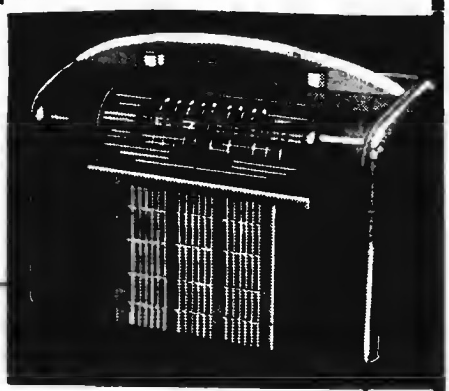

I.F. 455 KC.

All D.C. voltages measured with a vacuum tube voltmeter from socket contacts to chassis. A.C. voltages measured with a 1000 ohm per volt A.C. meter from socket contacts to chassis. Volume control fully advanced. No signal. 117 A.C. line voltage. All voltages shown are positive D.C. unless otherwise noted.

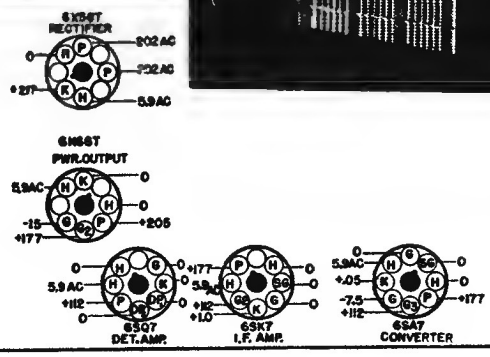

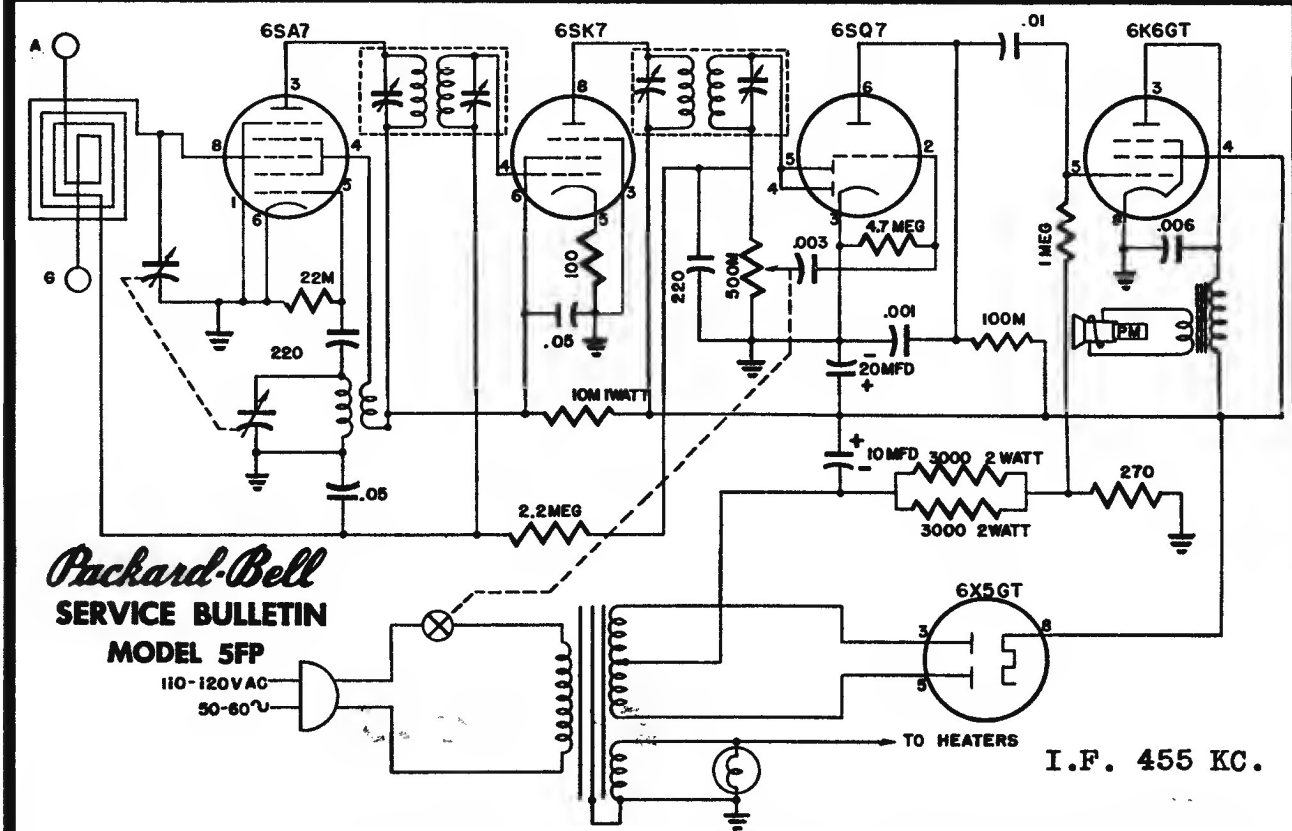

Packard-Bell

SERVICE BULLETIN

MODEL 5FP

I.F. 455 KC.