PHILCO *Phonograph Model 41-620*

To reproduce the sound from a record, the light beam of the reproducer must be carefully positioned on the light sensitive cell. If the light beam is not carefully set, the sound reproduction will be distorted, weak or, if the light beam is completely on or off the cell, the phonograph will be silent.

If any of these conditions exist, the following adjustment procedure should be made: —

NOTE — These adjustments should be made with the power line voltage at 118 volts A. C.

A.—ADJUSTING WIDTH OF LIGHT-BEAM

To make this adjustment push the lamp socket assembly into its holder until a clear image of the lamp filament appears on the light cell. The socket should then be slightly pushed in beyond this point until the rectangular spot of light is 5/32" in width. The socket assembly is now rotated so that the spot light is vertical.

B.—POSITIONING THE LIGHT-BEAM

To position the light-beam on the light cell, turn the adjusting screw at the lower left side of the reproducer until the spot is half on the cell and half on the metal frame surrounding the cell.

C.—ADJUSTING INTENSITY OF LAMP

When shipped from the factory, the lamp of the reproducer is adjusted for best operating efficiency. The intensity of the light from the lamp is adjusted by compensator (22) located on the radio chassis. Under ordinary circumstances, an adjustment will not be necessary. When replacing the reproducer or lamp, however, there may be a tendency towards microphonic feedback. In this case the compensator is adjusted as follows:

1. Turn volume control on full and play a record.
2. While the record is playing, turn compensator in the direction necessary to eliminate microphonic feedback. By turning the compensator the strength of the pick-up output is increased or decreased.

D.—INSTALLING NEW LAMP
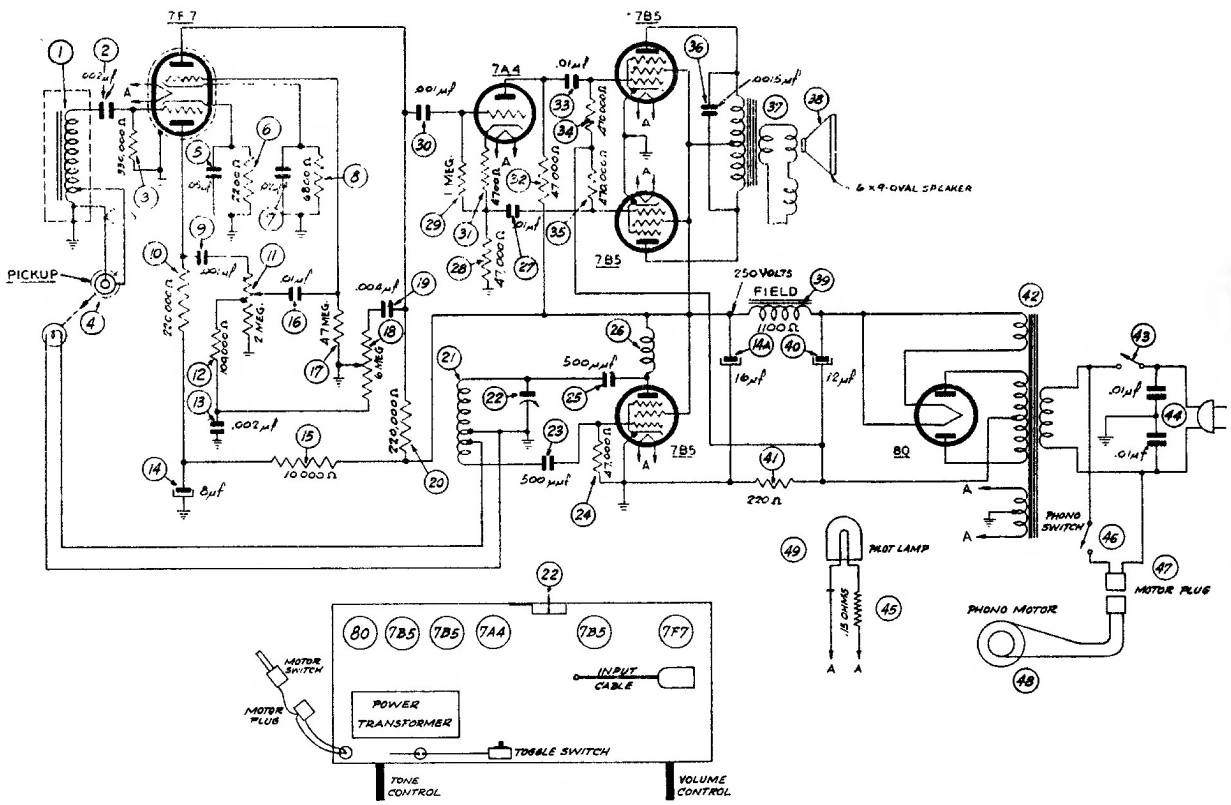
When installing a new lamp in the socket, there are two positions in which the lamp can be inserted. Ordinarily, either of these positions can be used. In some cases, however, due to the lamp filament being off center, the lamp must be inserted in the position that gives the best centering of the spot of light on the vibrating mirror.