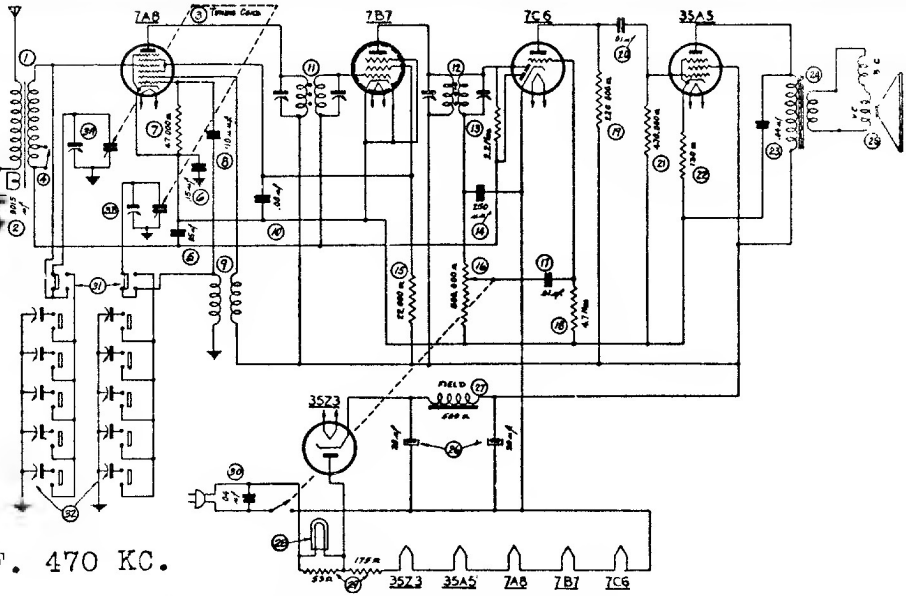

I.F. 470 KC.

TRANSITONE HOME RADIO MODELS PT-49 AND PT-51

Schem. No.	Description	Philco Part No.
1	Antenna Transformer	32-3168
2	Tubular Condenser (.0015 mf., 200 v.)	30-4555S
3	Tuning Condenser	31-2428
4	Switch	42-1406
5	Tubular Condenser (.05 mf., 200 v.)	30-4519S
6	Tubular Condenser (.15 mf., 400 v.)	30-4505S
7	Resistor (47,000 ohms, ¼ watt)	33-347154
8	Mica Condenser (110 mmf.)	30-1130
9	Oscillator Transformer	32-3167
10	Tubular Condenser (.05 mf., 200 v.)	30-4519S
11	1st I. F. Transformer	32-3149
12	2nd I. F. Transformer	32-3150
13	Resistor (2.2 meg., ¼ watt)	33-522154
14	Mica Condenser (250 mmf.)	61-0033
15	Resistor (22,000 ohms, ½ watt)	33-322334
16	Volume Control (500,000 ohms)	33-5906
17	Tubular Condenser (.01 mf., 200 v.)	30-4479S
18	Resistor (4.7 meg., ¼ watt)	33-547154
19	Resistor (220,000 ohms, ¼ watt)	33-422154
20	Tubular Condenser (.01 mf., 400 v.)	30-4572S
21	Resistor (470,000 ohms, ¼ watt)	33-447154
22	Resistor (130 ohms, ½ watt)	33-113336
23	Tubular Condenser (.04 mf., 400 v.)	30-4119S
24	Output Transformer Part of Speaker No.	36-1469
25	Speaker	36-1469
26	Electrolytic Condenser (20-20 mf., 150 v.)	30-2382
27	Field Coil Part of Speaker No.	36-1469
28	Pilot Lamp	34-2068
29	Line Resistor	33-3367
30	Tubular Condenser (.04 mf., 400 v.)	30-4119S
31	Push Button Switch	42-1485
32	Padding Condenser Strip	31-6293

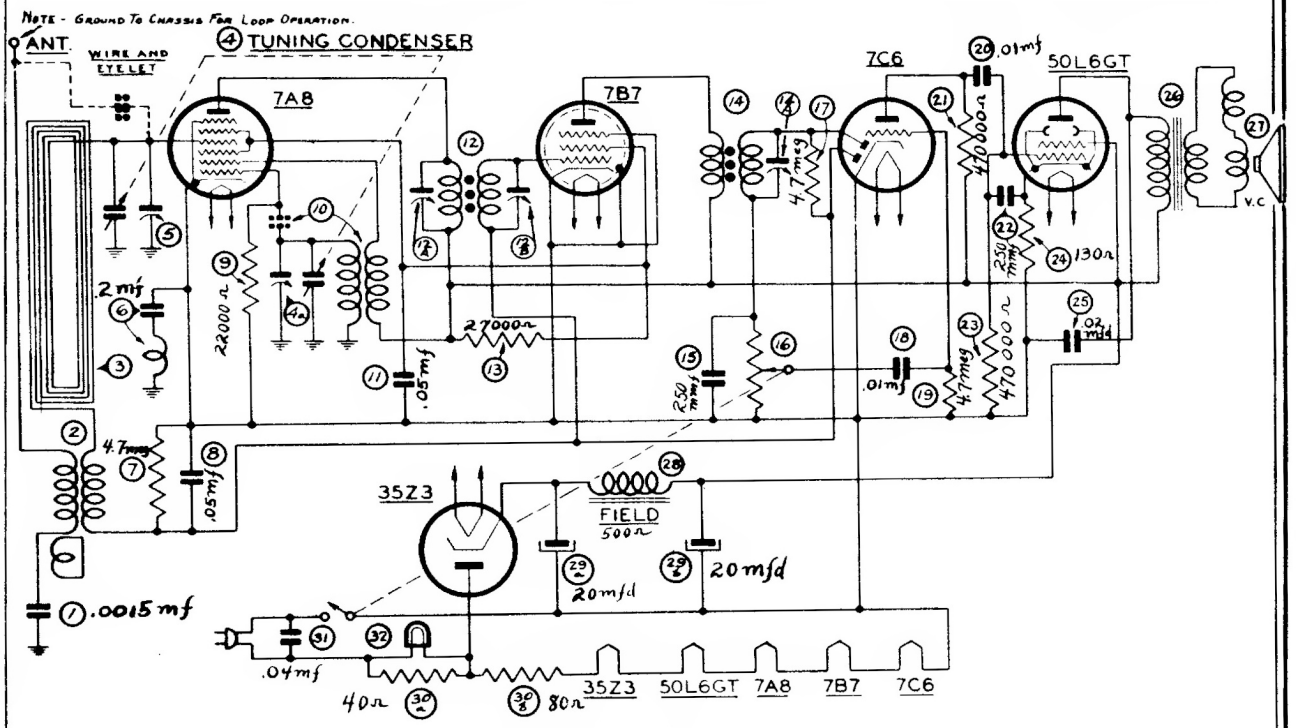

SCHEMATIC DIAGRAM — PT-42, PT-44

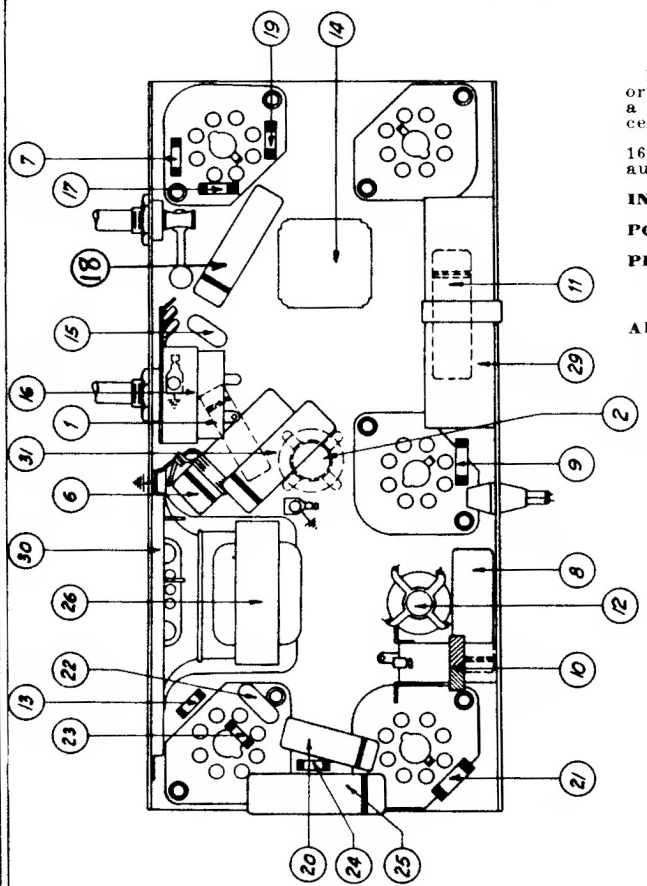

Models PT-30, PT-42, PT-44, PT-49

Models PT-30, PT-42, PT-44, and PT-49 are five (5) tube A. C. or D. C. operated Super-heterodyne compact radios employing a built-in loop aerial. These Models are similar with the exception of the cabinets, chassis and speaker size.

In addition each Model includes a tuning band from 540 to 1600 K. C., Automatic Volume Control; beam power pentode audio output stage and Philco Loktal tubes.

INTERMEDIATE FREQUENCY: 455 K. C.

POWER SUPPLY: 115 Volts, A. C. or D. C.

PHILCO TUBES: 7A8, converter; 7B7, I. F. Amplifier; 7C6, 2nd detector, A. V. C., 1st audio; 50L6GT, beam power audio output and a 35Z3, rectifier.

AERIAL AND GROUND: Under ordinary operating conditions an outside aerial or ground is not required. In some locations, however, such as steel reinforced buildings and other shielded areas, an outside aerial should be used for maximum performance. For this purpose an outside aerial connection is located on the rear lower left corner of the chassis. Simply remove the lug from under the screw and attach the aerial lead to the lug.

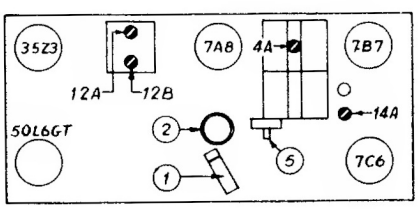

PHILCO