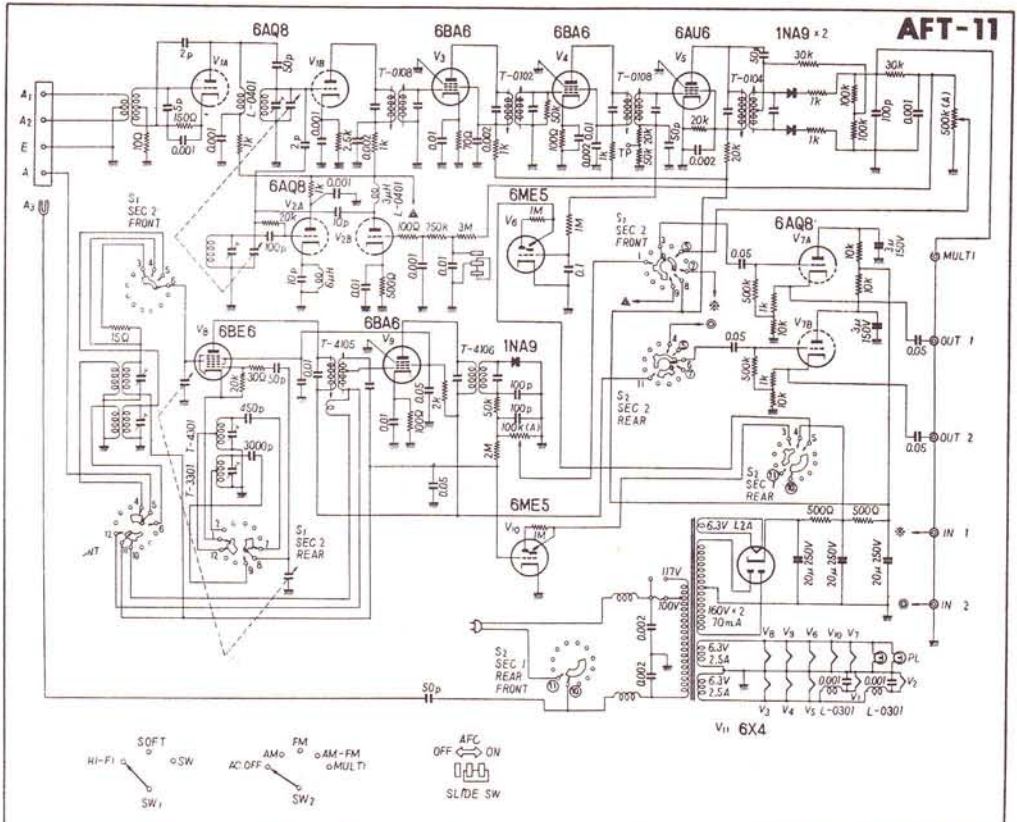
AFT-11
6AQ8
6BA6
6BA6
6AU6
1NA9 × 2
6AQ8
6ME5
6AQ8
6BE6
6BA6
1NA9
6ME5
6X4
6.3V L2A
60V × 2
70mA
6.3V
2.5A
6.3V
2.5A
MULTI
OUT 1
OUT 2
IN 1
IN 2
PL
S1 SEC 2 FRONT
S2 SEC 2 FRONT
S3 SEC 2 REAR
S1 SEC REAR
S1 SEC 2 REAR
S2 SEC 1 REAR FRONT
117V
100V
SOFT
HI-FI
SW
SW1
AM
FM
AC OFF
AM-FM
MULTI
SW2
AFC
OFF
ON
SLIDE SW