# FM-B302

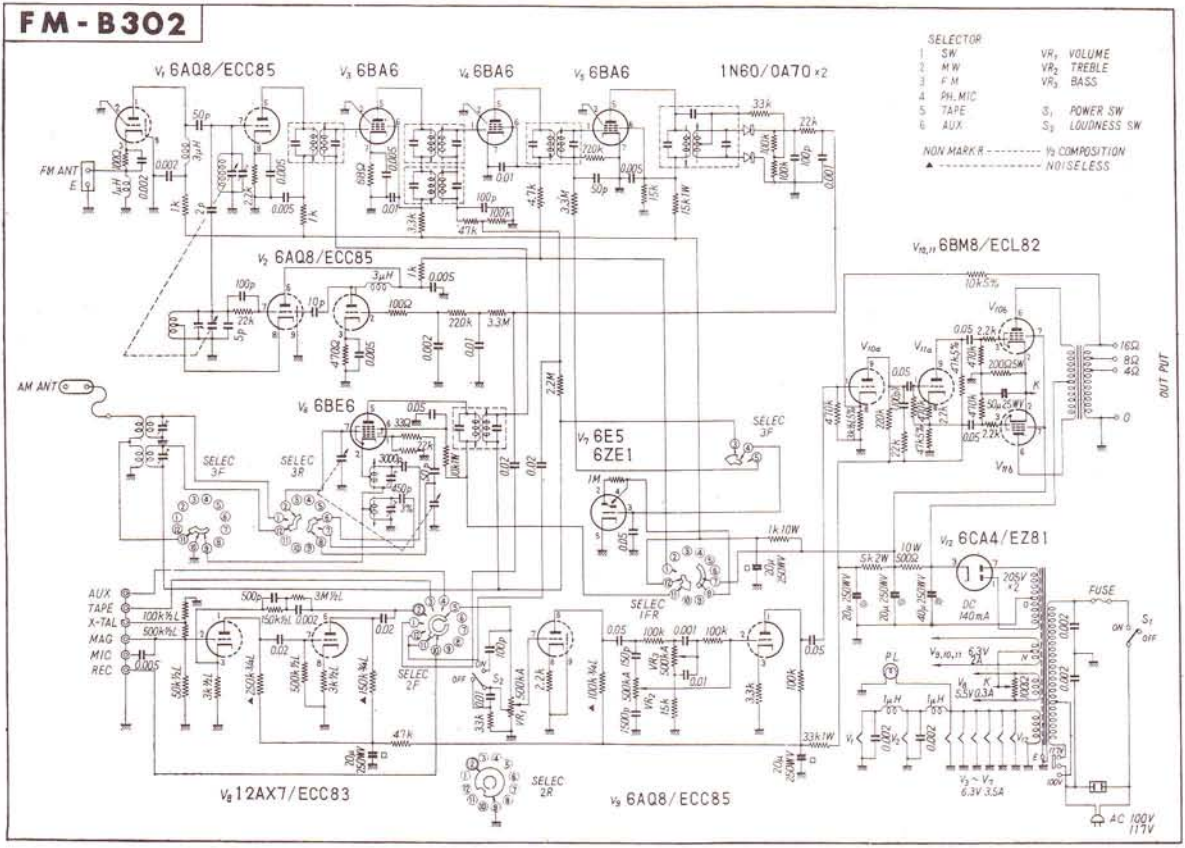
V1 6AQ8/ECC85
V3 6BA6
V4 6BA6
V5 6BA6
1N60/OA70 ×2
V2 6AQ8/ECC85
V10,11 6BM8/ECL82
V6 6BE6
V7 6E5
6ZE1
V12 6CA4/EZ81
V8 12AX7/ECC83
V9 6AQ8/ECC85
FM ANT
AM ANT
SELECTOR
1 SW
2 MW
3 FM
4 PH.MIC
5 TAPE
6 AUX
VR1 VOLUME
VR2 TREBLE
VR3 BASS
S1 POWER SW
S2 LOUDNESS SW
NON MARK R ---------- ½ COMPOSITION
▲ ---------- NOISELESS
SELEC 3F
SELEC 3R
SELEC 1FR
SELEC 2F
SELEC 2R
AUX
TAPE
X-TAL
MAG
MIC
REC
OUT PUT
16Ω
8Ω
4Ω
FUSE
DC 140mA
AC 100V 117V
V3~V5 6.3V 3.5A