PIONEER
TRACK
T-8800

T-8800

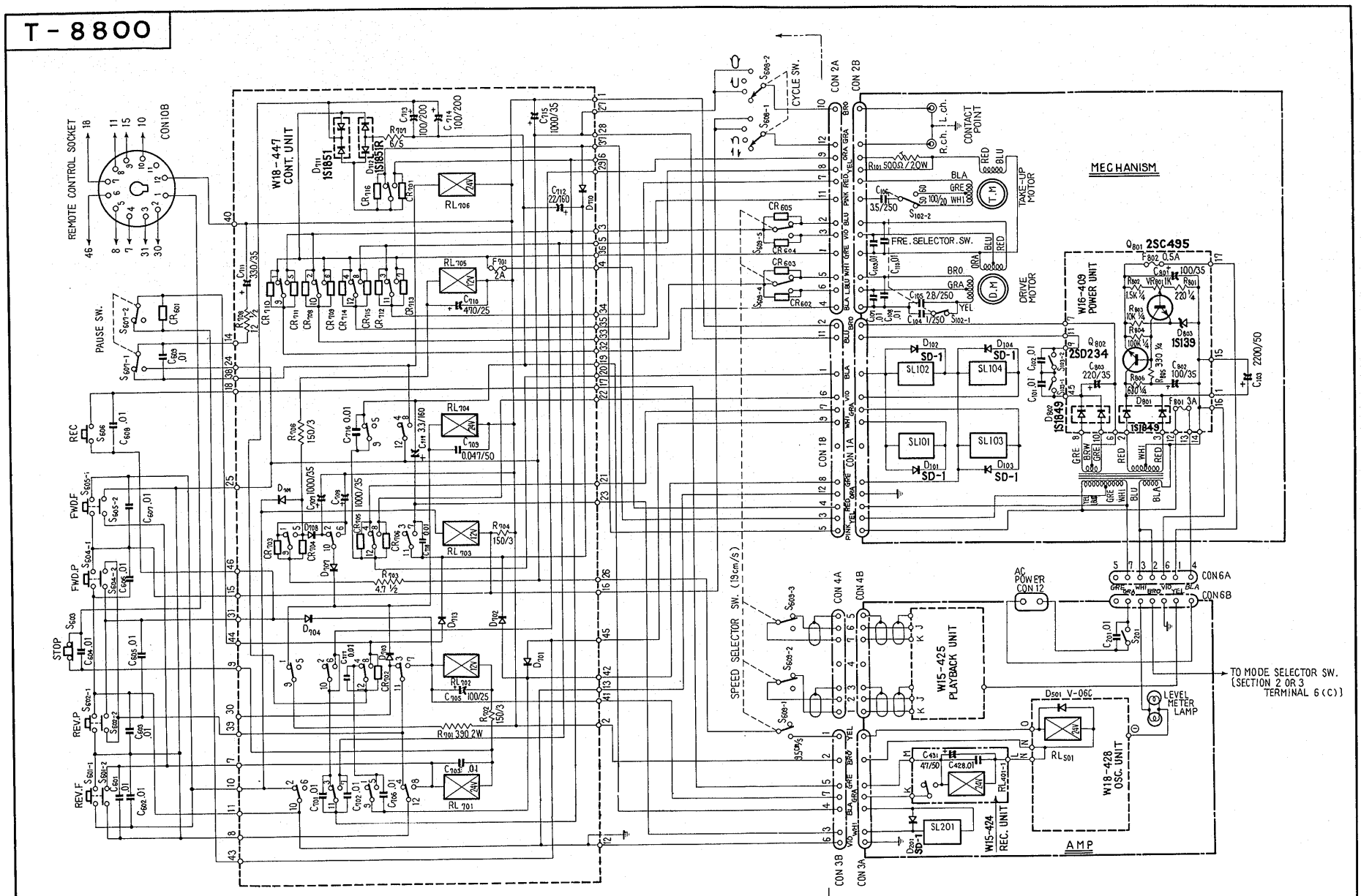

1. A 0.01 CAPACITOR IS OF A 1.4KV (WORK VOLTAGE) TYPE.
2. "A" AND "B" FOR CONNECTOR INDICATE PLUG AND SOCKET RESPECTIVELY.
3. DIODE IS V06C UNLESS OTHERWISE SPECIFIED.
4. THE ABBREVIATIONS STAND FOR THE COLORS OF LEAD WIRES.

VIO : VIOLET
WHI : WHITE
BLA : BLACK
GRA : GRAY
GRE : GREEN
BRO : BROWN
YEL : YELLOW
ORA : ORANGE
BLU : BLUE
L.BLU : LIGHT. BLUE

Model T-8800 AMPLIFIER

T-8800

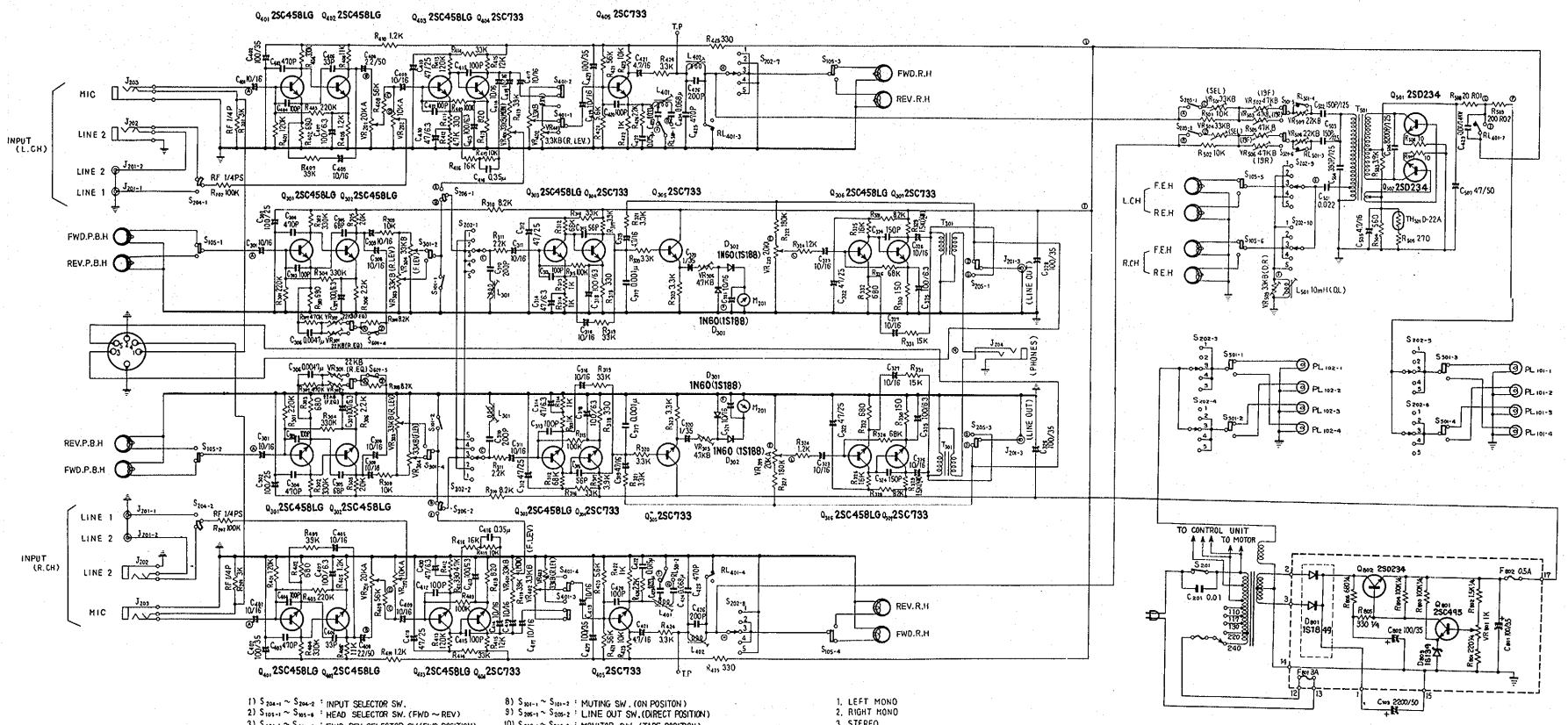

1) $S_{204-1} \sim S_{204-2}$: INPUT SELECTOR SW.
2) $S_{103-1} \sim S_{103-6}$: HEAD SELECTOR SW. (FWD ~ REV)
3) $S_{401-1} \sim S_{401-4}$: FWD-REV SELECTOR SW.(FWD POSITION)
4) $S_{501-1} \sim S_{501-4}$: FWD-REV SELECTOR SW.(FWD POSITION)
5) $S_{601-1} \sim S_{601-5}$: PLAYBACK EQUALIZER SW.(7½ IPS POSITION)
6) $RL_{501-1} \sim RL_{501-4}$: RECORDING EQUALIZER SW.(7½ IPS POSITION)
7) $RL_{401-1} \sim RL_{401-4}$: REC-PLAYBACK SELECTOR SW.(PLAYBACK POSITION)
8) $S_{101-1} \sim S_{101-2}$: MUTING SW. (ON POSITON)
9) $S_{205-1} \sim S_{205-2}$: LINE OUT SW. (DIRECT POSITION)
10) $S_{206-1} \sim S_{206-2}$: MONITOR SW. (TAPE POSITION)
11) $S_{203-1} \sim S_{203-2}$: BIAS SELECTOR SW. (A POSITION)
12) S_{201} : POWER SW. (OFF POSITION)
13) $S_{501-1} \sim S_{501-6}$: FWD-REV SELECTOR SW. (FWD. POSITION)
14) $S_{202-1} \sim S_{202-10}$: MODE SW. (STEREO POSITION)

1. LEFT MONO
2. RIGHT MONO
3. STEREO
4. ON SOUND (L-P.B. R-REC)
5. ON SOUND (L-REC R-P.B.)

15) RESISTORS NONMARK : OHM , K: KILOHM
16) CAPACITORS NONMARK : μF , P: $p\mu F$