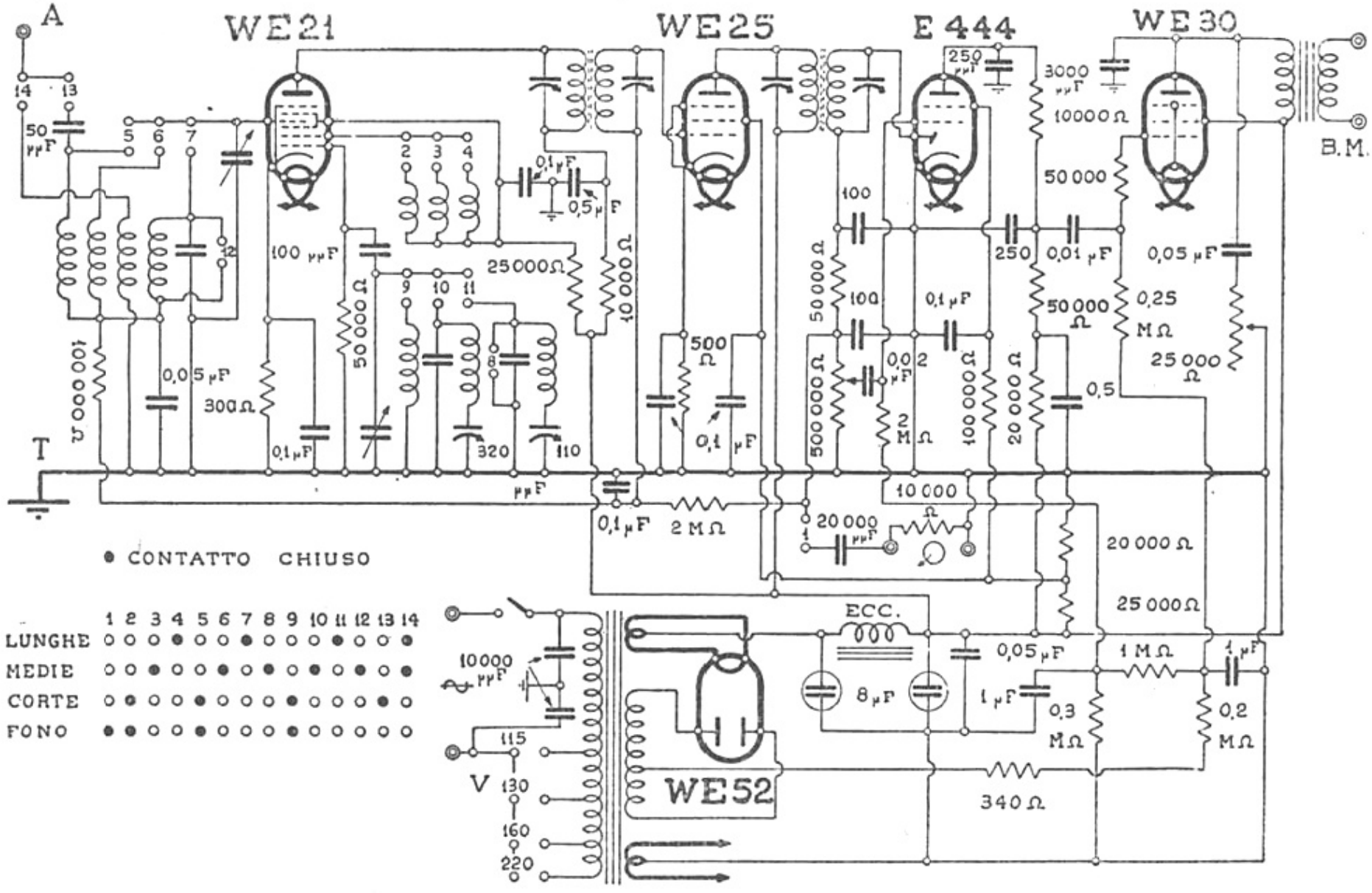

RADIO LAMBDA - "E 525 C. M."