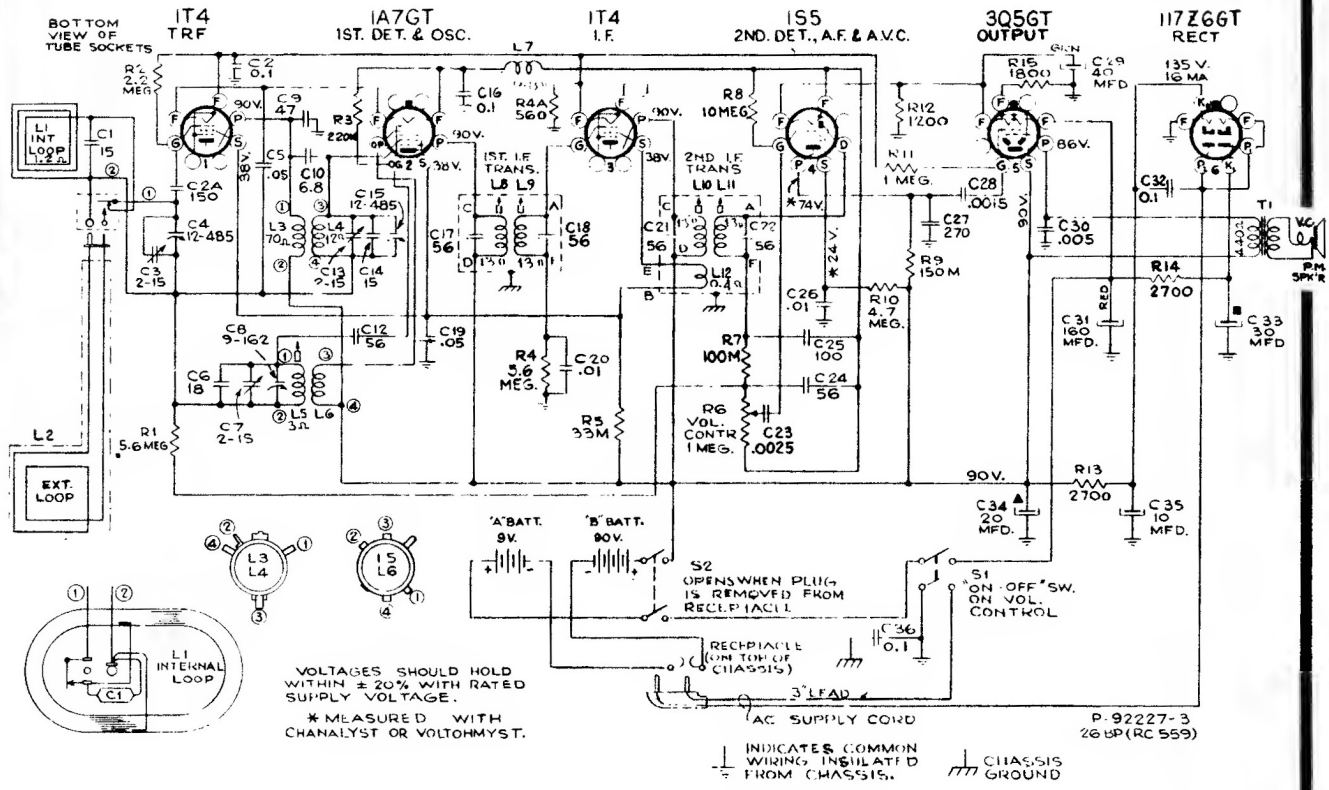

Alignment

With gang in full mesh, the pointer should be 1/16-inch to the left of the 550 kc dial mark.

Steps	Connect the high side of test-oscillator to—	Tune test-osc. to—	Turn radio dial to—	Adjust the following for max. peak output—
1	I-F grid, in series with .01 mfd.	455 kc	Quiet point at 1,600 kc end of dial	L10, L11 (2nd I-F trans.)
2	1st-Det. grid cap, in series with .01 mfd.			L8, L9 (1st I-F trans.)
3	radiated signal at 1,600 kc	1,600 kc	1,600 kc	C7 (osc.) C3 (ant.) C13 (det.)
4	radiated signal 600 kc	600 kc	600 kc	L5 (Rock in)
5	Repeat steps 3 and 4			

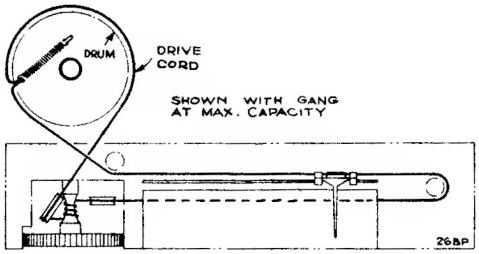

AC-DC Operation.—

This receiver will operate on 105 to 125 volts, AC 50 or 60 cycles, or DC.

A power cord is housed in the bottom right hand corner looking inside the cabinet as shown in the illustration. Open the cabinet like a suit case, first pushing to one side the little pins under the handle ends to raise the clips. Then pull the power cord plug out of its socket in the top right hand corner as shown, and take out and unroll the power cord. A slot in the bottom allows the closing of the cabinet with the power cord passing through. Close the cabinet with the cord extending and insert the plug into a convenient electrical outlet.

When returning to battery operation, be sure to replace the power plug in its socket inside the case with the cord rolled up.

NOTE.—If reception is not obtained on DC, reverse plug in outlet receptacle. This may also reduce hum on AC operation.

Using External Loop.—

A loop antenna is housed inside the cabinet. Under normal conditions this will give satisfactory reception. If however the receiver is used in a location remote from broadcasting stations where signals are weak, or where interference is excessive, or in a shielded compartment such as an automobile, airplane or railroad train, an RCA Magic Wave Magnifier Antenna with suction cup fastener may be purchased from your dealer. This antenna has a strap connector cord ending in a two-prong plug for attachment to the loop antenna frame. Open the case, plug the antenna cord into the socket (it will only go in one way), bring the strap out at the slot in the case and attach the Antenna by means of the suction cup to any convenient vertical surface. The RCA Magic Wave Magnifier may be attached inside the back case, when not in use, by means of three snap fasteners.

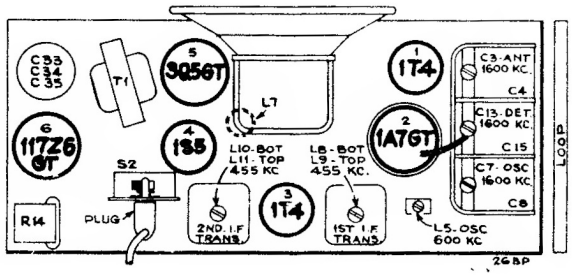

RCA 26 BP Portable