RCA VICTOR

MODELS 5-C-591, 5-C-592

Chassis No. RC-1148

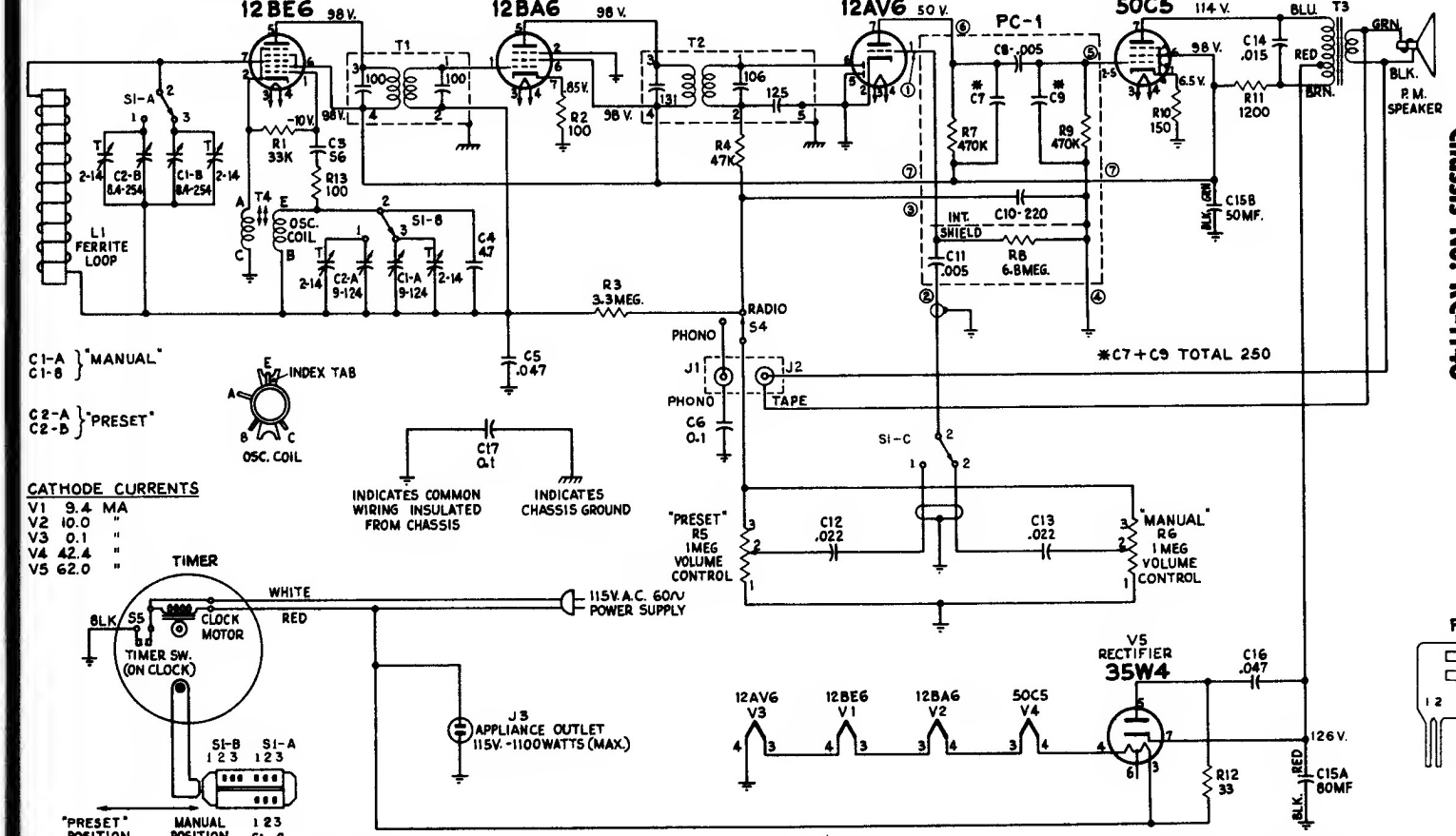

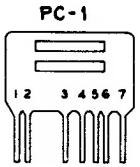

CATHODE CURRENTS

V1	9.4 MA
V2	10.0 "
V3	0.1 "
V4	42.4 "
V5	62.0 "

The clock is a new RCA developed timing unit, basically different from previous design. In addition to the conventional "automatic" wake-up features, a "preset" position is provided. With this "preset" feature it is possible to have the clock turn on the radio at a predetermined time to a different station and with a different volume level than when the radio was turned off (either manually or by "sleep" feature of the clock). A second important feature of the new timing unit is the simplification of the controls; the large clear polystyrene clock crystal has a knurled raised rim which can be set by rotation to four positions: "OFF," "ON," "AUTO," and "PRE-SET." A molded knob at the cabinet top can be pulled out for alarm buzzer sounding or pushed down for buzzer silencing; the same knob can be rotated for setting the "sleep" timing. Sleep time setting is indicated in a small window at the upper clock dial marked in 15 minute intervals up to one hour.