RCA VICTOR

MODEL 6-HFT-1

Tape Recorder TR-1A

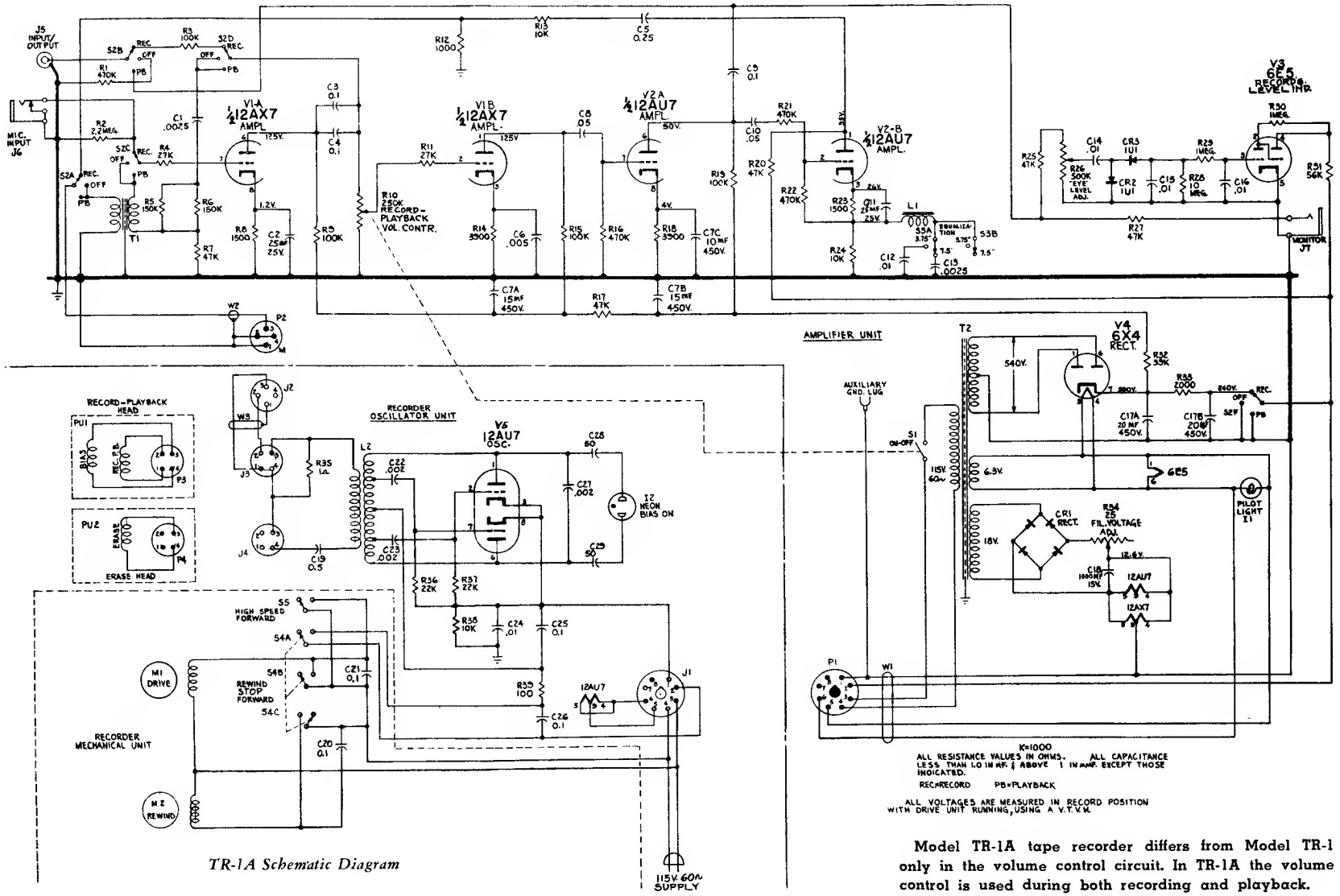

TR-1A Schematic Diagram

Model TR-1A tape recorder differs from Model TR-1 only in the volume control circuit. In TR-1A the volume control is used during both recording and playback.