RCA VICTOR

8-C-7 SERIES, 8-C-8 SERIES

Chassis No. RC-1166

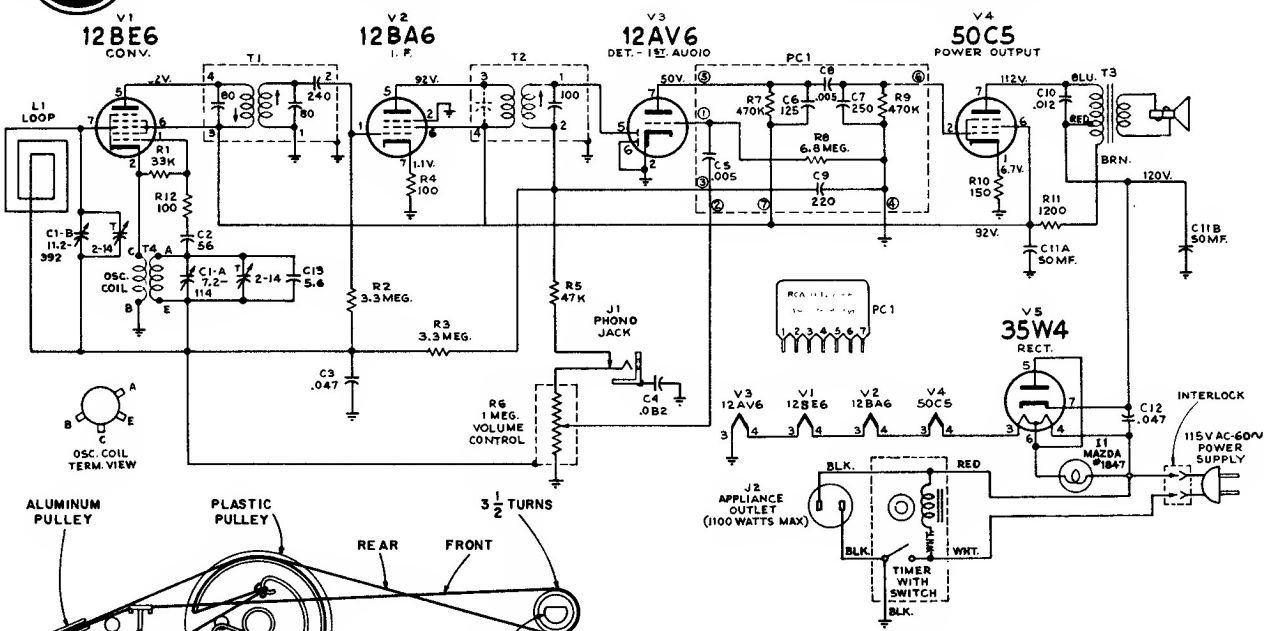

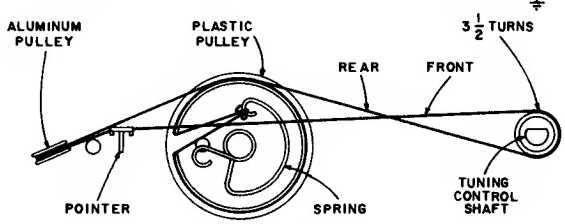

ASSEMBLY SHOWN WITH TUNING CONDENSER PLATES FULLY MESHED.

REMOVAL OF CABINET HOOD

Remove two screws at bottom rear of hood and one screw (long) at top rear of hood. The time-set knob is not removable. Pull bottom of hood away from chassis cradle to disengage power interlock. Lift hood up and to the rear.

REMOVAL OF CHASSIS FROM CRADLE

Remove volume and tuning control knobs.

Disconnect clock leads at chassis.

Disconnect three speaker leads.

Remove one screw at outside of cradle (close to speaker).

Swing right end of chassis (as viewed from rear) to the rear of the cradle.

Disengage chassis from cradle by moving endways.

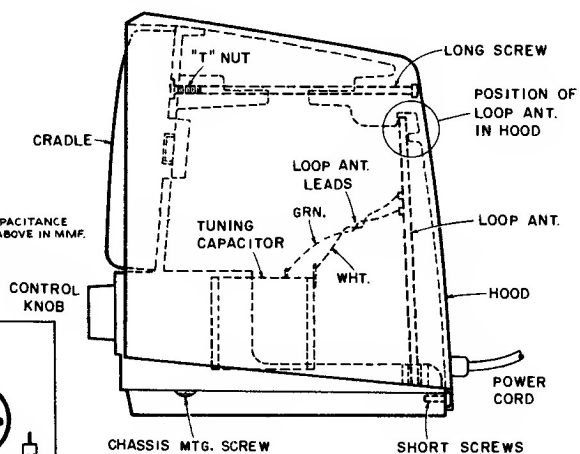

Cabinet Assembly

K=1000
ALL RESISTANCE VALUES IN OHMS. ALL CAPACITANCE VALUES LESS THAN 1.0 IN MF. AND 1.0 AND ABOVE IN MMF. EXCEPT THOSE INDICATED.

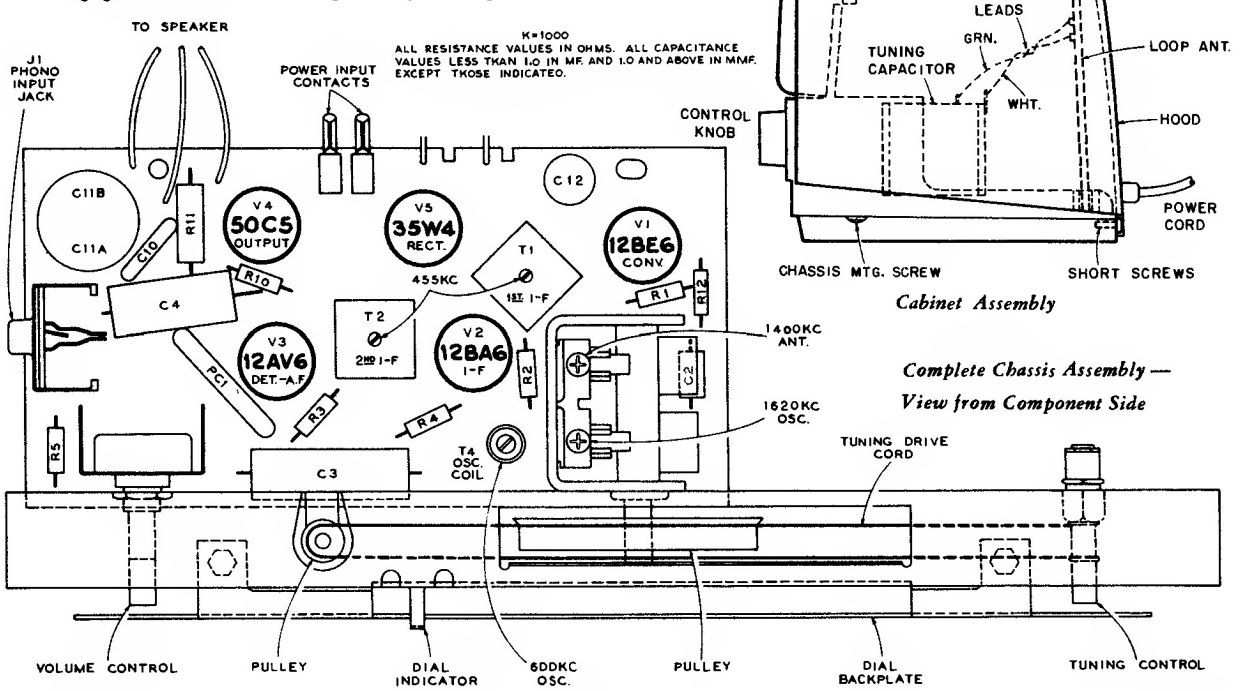

Complete Chassis Assembly — View from Component Side