RCA Victor XF-3 Series, Chassis RC-1190A, exact material on this page. XF-2 Series, Chassis RC-1190, practically the same electrically except for tone control circuit and use of pilot lights. XF-4 Series, Chassis RC-1190B, differs from XF-3 in minor circuit differences and the use of dual speakers.

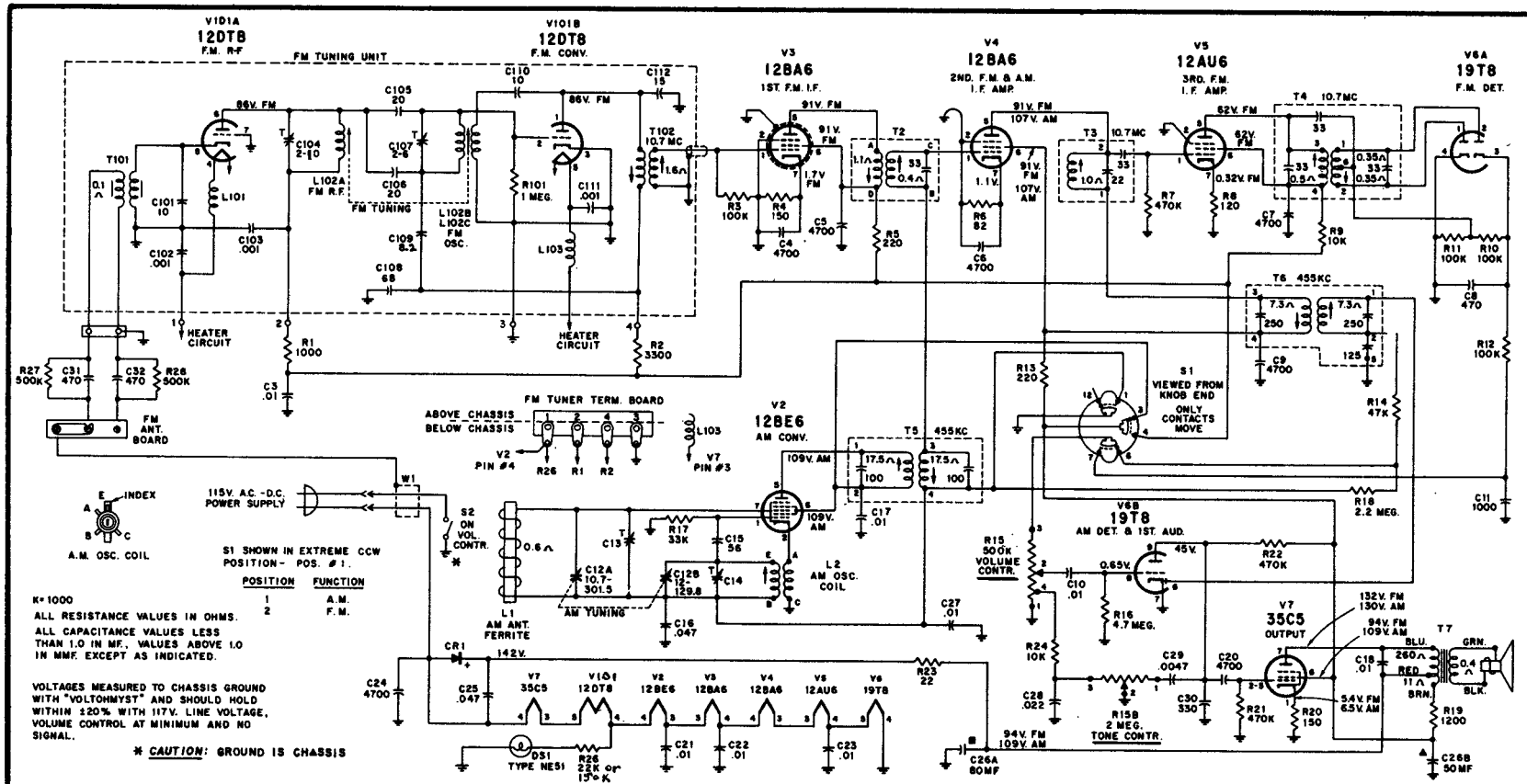

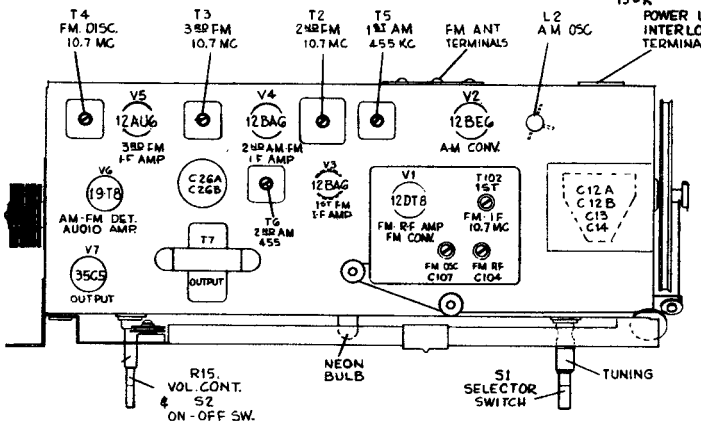

Tube and Trimmer Locations

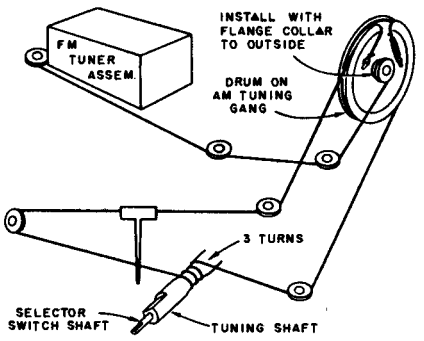

Dial and Drive Cord Drive