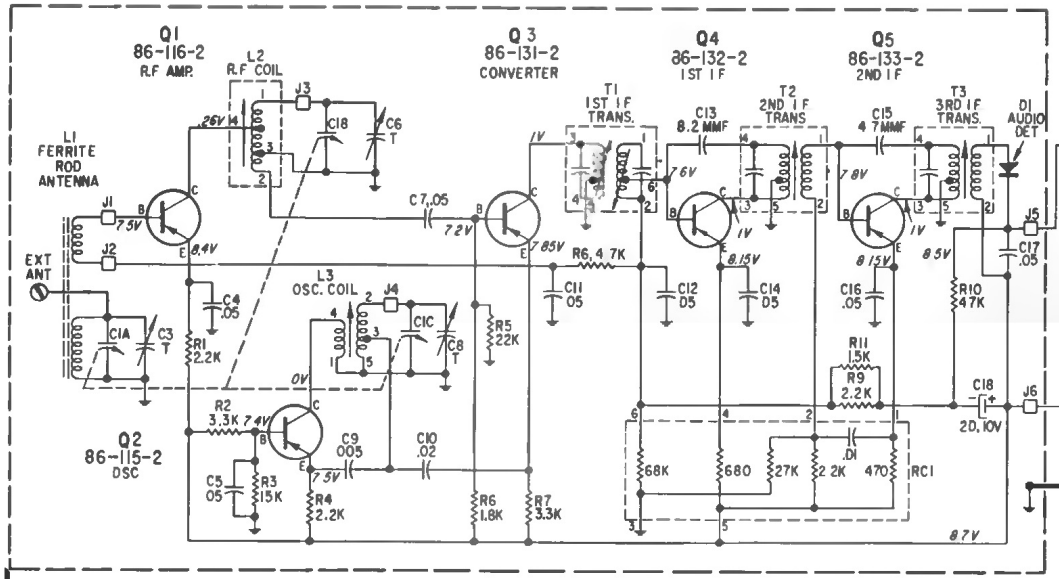

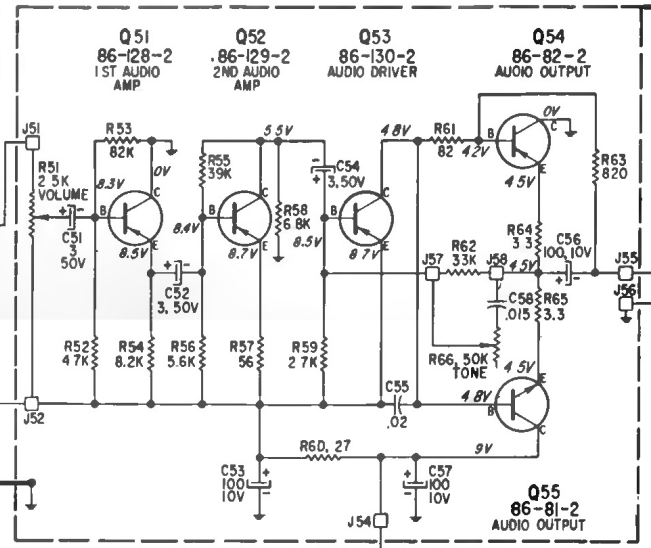

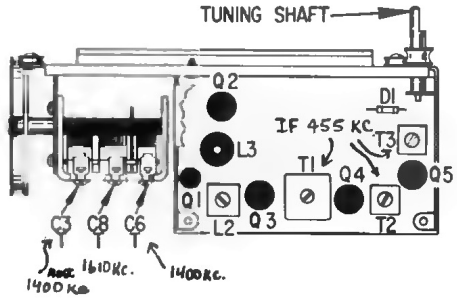

AMPLIFIER CIRCUIT BOARD DIAGRAM

NOTE: TONE CONTROL (R66) LOCATED ON ESCUTCHEON.

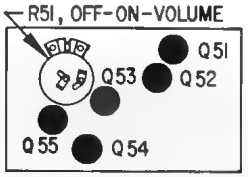

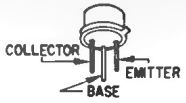

BOTTOM VIEW OF TRANSISTORS

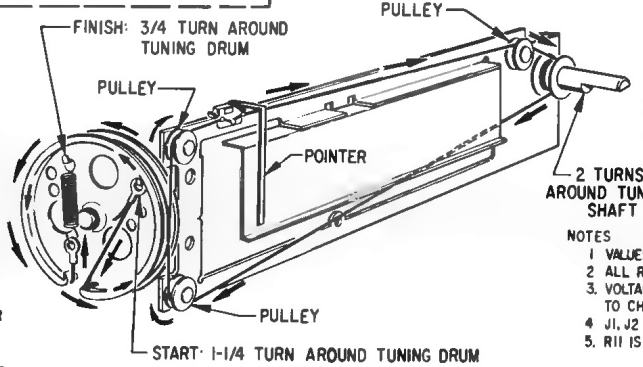

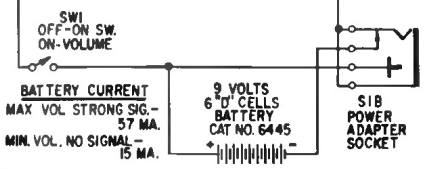

NOTES

1. VALUES OF CAPACITORS IN MFD UNLESS OTHERWISE NOTED
2. ALL RESISTORS ARE 1/2 WATT, UNLESS OTHERWISE NOTED.
3. VOLTAGE READINGS ARE TAKEN WITH "VTVM" FROM POINT INDICATED TO CHASSIS GROUND, NO SIGNAL INPUT.
4. J1, J2 ETC INDICATES TERMINAL CONNECTION ON CIRCUIT BOARDS.
5. R11 IS WIRED ON CIRCUIT SIDE OF BOARD.

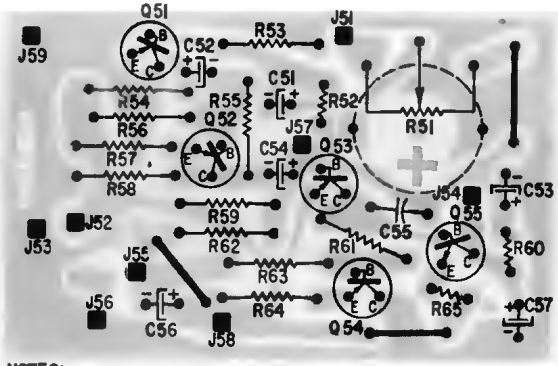

NOTES:

1. WIRING DIAGRAM IS SHOWN FROM CIRCUIT SIDE OF BOARD.
2. SOLID LINES INDICATE WIRE JUMPERS

NOTE: *STRINGING DIAGRAM SHOWN WITH TUNING GANG FULLY CLOSED.*

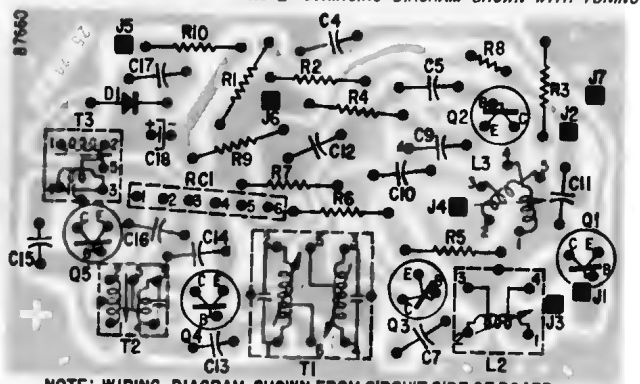

NOTE: WIRING DIAGRAM SHOWN FROM CIRCUIT SIDE OF BOARD.

TUNER CIRCUIT BOARD DIAGRAM

SEARS, ROEBUCK and CO.

RADIO CHASSIS No. 528.63131

USED IN MODELS:

6223 6224
6225