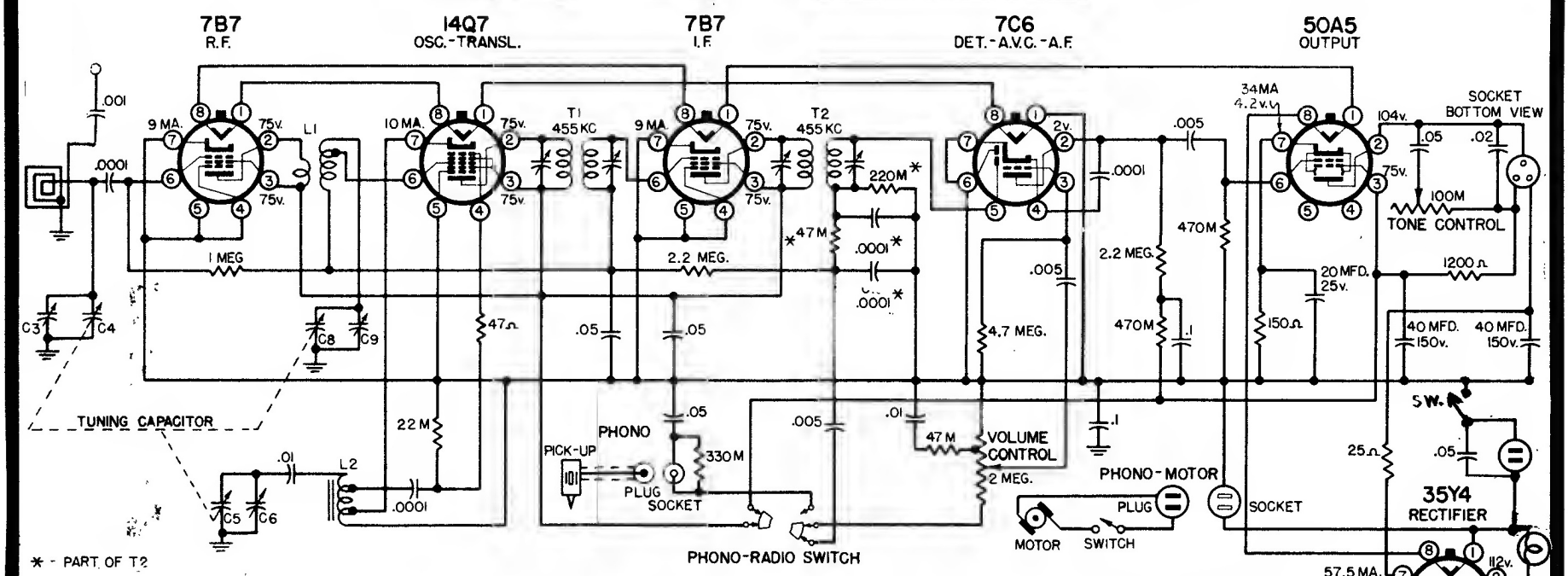

ALIGNMENT PROCEDURE

Output meter connection.....Across loud speaker voice coil
Generator ground lead connection.....I.F. alignment-negative 'B' lead
.....R.F. alignment-receiver chassis
Dummy antenna value to be in series with generator output.....See chart below
Connection of generator output lead.....See chart below
Generator Modulation.....30%, 400 cycles
Position of Volume Control.....Fully on
Position of Tone Control.....Treble
Position of pointer with tuner fully closed.....Last line below 540 calibration mark

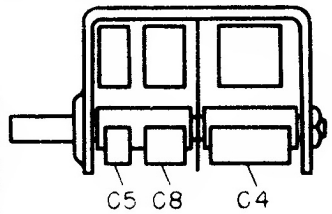

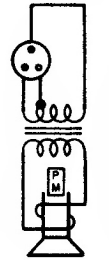

POSITION OF TUNER	GENERATOR FREQUENCY	DUMMY ANTENNA	GENERATOR CONNECTION	TRIMMERS (ADJ. IN ORDER SHOWN)
Closed	455 Kc.	0.1 mfd.	Transl.-Grid	T2 - T1
1500 Kc.	1500 Kc.	200 mmfd.	Ant.	C5
1500 Kc.	1500 Kc.	200 mmfd.	Ant.	C8
1500 Kc.	1500 Kc.	200 mmfd.	Ant.	C4

Sears, Roebuck & Co.
Models 7080, 7100, 101.811,
Phono & Switch omitted on
Models 7054, 101.808,
and 7090, 101.810.

TUBE SOCKETS ARE VIEWED FROM UNDER SIDE OF CHASSIS. VOLTAGE READINGS SHOWN AT SOCKET PRONGS ARE TO NEG. "B", AND ARE TAKEN WITH NO SIGNAL, WITH PHONO-RADIO SWITCH IN RADIO POSITION, AND WITH LINE VOLTAGE AT 117 VOLTS. WHERE NO READING IS GIVEN THE VOLTAGE IS ZERO OR TOO LOW TO READ.