SPARTON SUPERHETERODYNE RADIO

Sparton RADIO-TELEVISION

THE SPARKS-WITHINGTON COMPANY

CHASSIS TYPE 6L3

MODELS 350, 351, 1300 & 1301

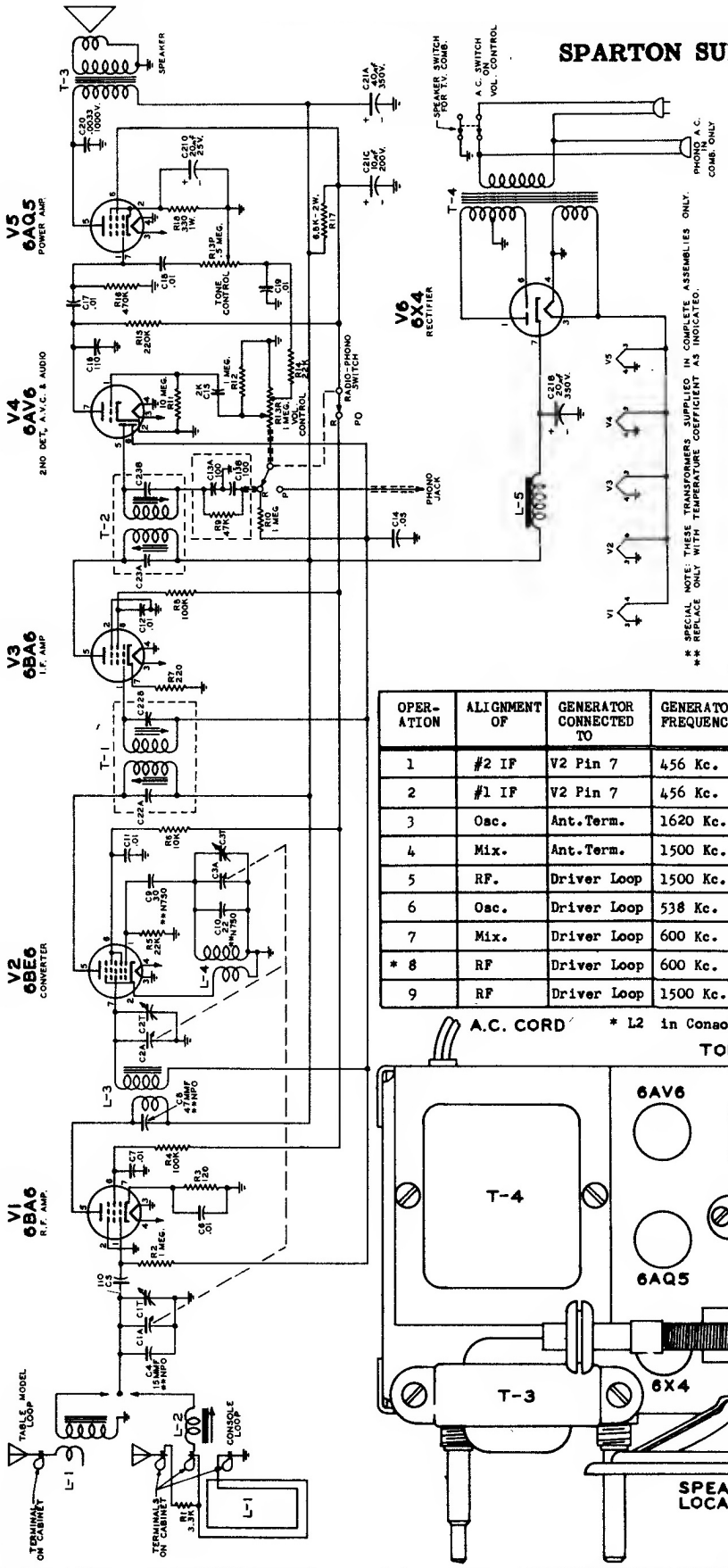

DESCRIPTION	PART NO.
C1A,1T GANG CONDENSER	PB40415
C2A,2T	
C3A,3T	
C4 15 MMF CERAMIC DISK	PA4347-1
C5 .01 MFD	CC3OM-111A
C6 47 MMF	PA4334-2
C7 .01	PA4347-3
C8 33	PA4347-2
C9 .01	PA4334-2
C10 33	PA4334-2
C11 .01	PA4329-1
C12 .01	PC4334-303
C13A 100 C.&R. UNIT	PC3OM-111A
C13B 100	PA4334-2
C14 .05	PA4334-2
C15 .01	PA4334-2
C17 .01	PC4334-2
C18 110	PC426M-332
C19 .01	PA4307-32
C20 .03 1000V. TUBULAR	* PURCH. IN T1
C21A 40 MFD 350V. ELECTROLYTIC	* PURCH. IN T2
C21B 20 MFD 350V.	
C21C 20 MFD 200V.	
C21D 20 200V.	
C22A,B NO. 2 I.F. CAPACITOR	
C23A,B NO. 2 I.F. CAPACITOR	
C24 .01	BR12N-332
C25 .01	BR12N-103
C26 .01	BR123-103
C27 .01	BR123-104
C28 .01	BR123-721
C29 .01	BR123-721
C30 .01	PA4329-1
C31 .01	BR12N-104
C32 .01	BR12N-104
C33 .01	BR12N-103
C34 .01	BR12N-103
C35 .01	PA14459
C36 .01	BR12N-223
C37 .01	BR12N-224
C38 .01	BR123-224
C39 .01	BR123-682
C40 .01	CR123-331
C41 .01	
C42 .01	
C43 .01	
C44 .01	
C45 .01	
C46 .01	
C47 .01	
C48 .01	
C49 .01	
C50 .01	
C51A 40 MFD 350V.	
C51B 40 MFD 350V.	
C52 20 200V.	
C53 20 200V.	
C54A,B NO. 2 I.F. CAPACITOR	
C55A,B NO. 2 I.F. CAPACITOR	
R1 3.3K OHM ½ W.	
R2 1 MEGOHM ½ W.	
R3 100K ½ W.	
R4 100K ½ W.	
R5 10K ½ W.	
R6 220K ½ W.	
R7 220 ½ W.	
R8 100K ½ W.	
R9 47K ½ W.	
R10 10 MEGOHM ½ W.	
R11 3.3K ½ W.	
R12 TONE CONTROL (REAR)	
R13P VOLUME CONTROL (PANEL)	
R13R 250K OHM ½ W.	
R14 4.7K ½ W.	
R15 4.7K ½ W.	
R16 330 2 W.	
R17 330 1 W.	
R18 330 1 W.	

* SPECIAL NOTE: THESE TRANSFORMERS SUPPLIED IN COMPLETE ASSEMBLIES ONLY.
** REPLACE ONLY WITH TEMPERATURE COEFFICIENT AS INDICATED.

ALIGNMENT PROCEDURE

OPERATION	ALIGNMENT OF	GENERATOR CONNECTED TO	GENERATOR FREQUENCY	TUNING COND. SETTING	TRIMMER OR SLUG	REMARKS
1	#2 IF	V2 Pin 7	456 Kc.	Open	T2 Pri.	Tune for Max. Output
2	#1 IF	V2 Pin 7	456 Kc.	Open	T1 Pri.	Tune for Max. Output
3	Osc.	Ant.Term.	1620 Kc.	Open	C3T	Tune for Max. Output
4	Mix.	Ant.Term.	1500 Kc.	1500 Kc.	C2T	Tune for Max. Output
5	RF.	Driver Loop	1500 Kc.	1500 Kc.	C1T	Tune for Max. Output
6	Osc.	Driver Loop	538 Kc.	Closed	None	Check for Coverage
7	Mix.	Driver Loop	600 Kc.	600 Kc.	None	Check tracking
* 8	RF	Driver Loop	600 Kc.	600 Kc.	L2	Tune for Max. Output
9	RF	Driver Loop	1500 Kc.	1500 Kc.	C1T	Recheck Step 5

A.C. CORD

* L2 in Consoles only.

TOP VIEW

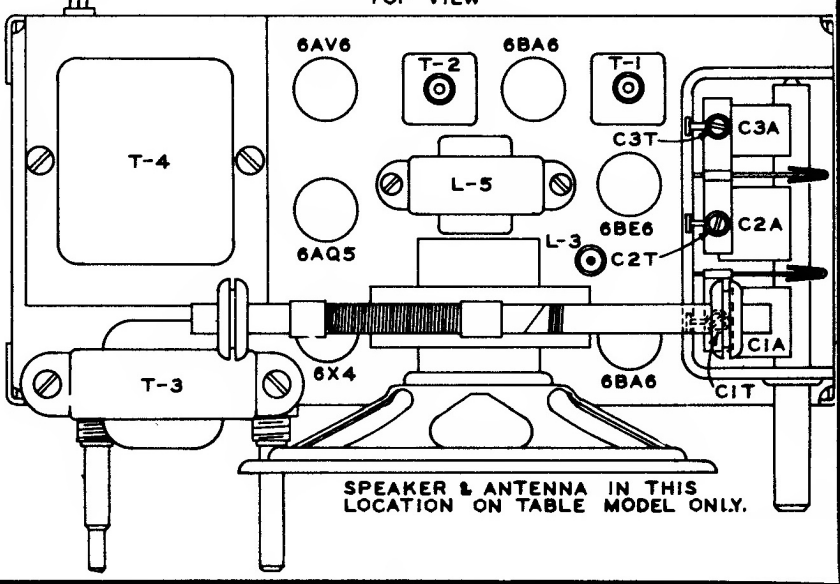

SPEAKER & ANTENNA IN THIS LOCATION ON TABLE MODEL ONLY.