STEWART-WARNER

CLOCK - RADIO MODELS 9162-A & 9162-B & 9164-A & 9164-B

The circuit shown is exact for 9162 sets, while 9164 sets are identical except for appliance receptacle which is not used.

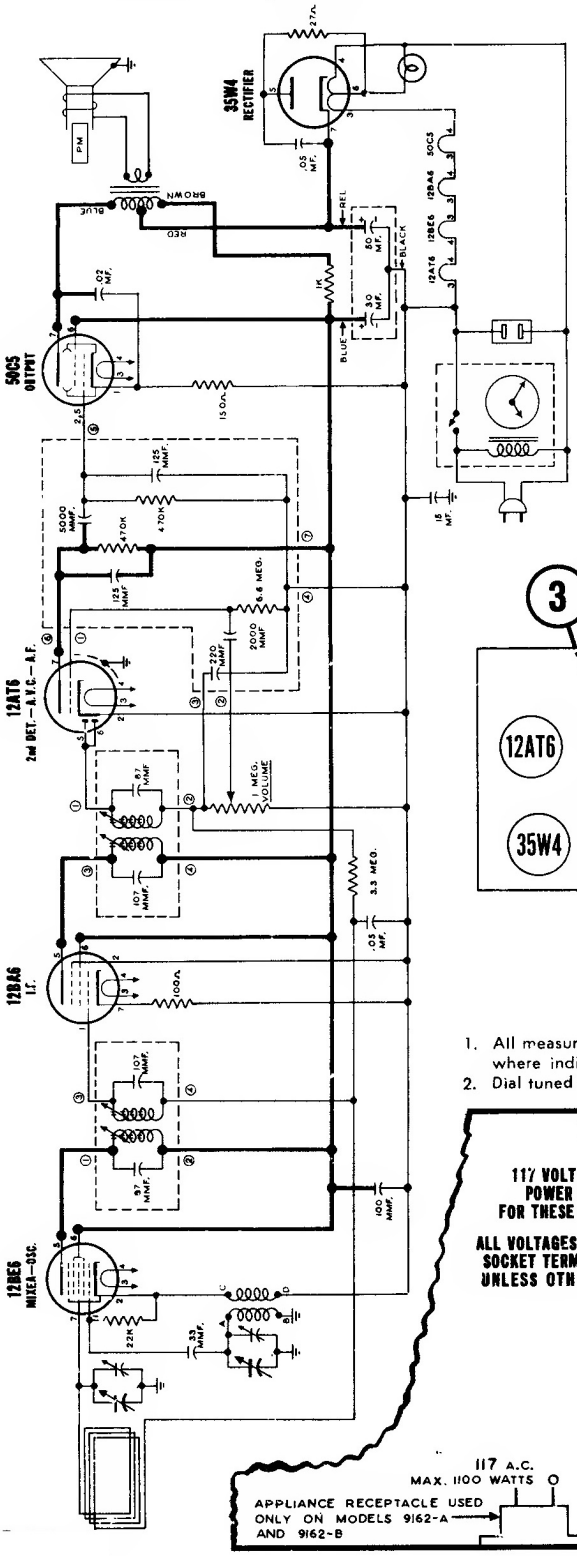

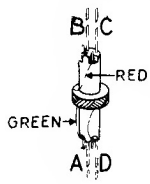

OSC. COIL 509832

Lettered terminals in illustration correspond to similarly lettered terminals on the circuit diagram.

Stringing of drive cord can be greatly facilitated if removal of the clock is undertaken. To string drive cord, turn the gang condenser drum to maximum counter-clockwise position and use the following parts:

505161 Tension spring
117057 Cord (2½ ft.)
119087 Ring
114955 Clip

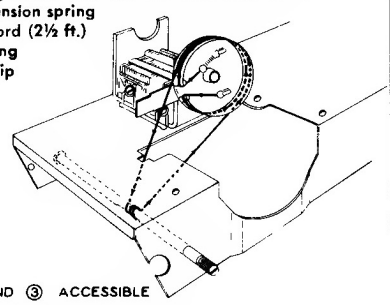

SLUGS ② AND ③ ACCESSIBLE FROM BOTTOM OF TRANSFORMERS.

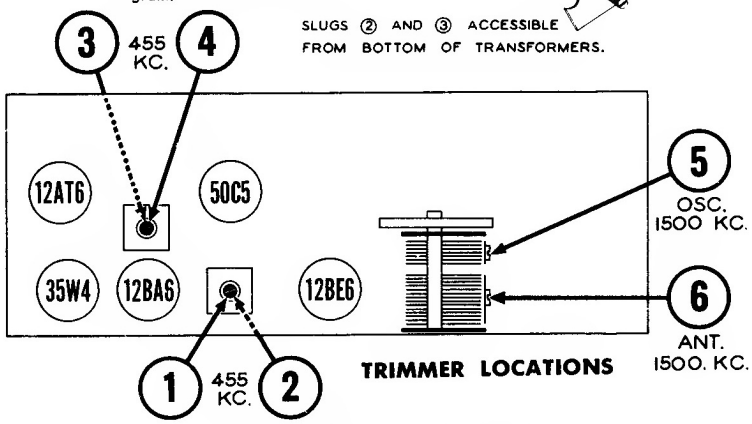

TRIMMER LOCATIONS

SOCKET VOLTAGES

1. All measurements made with a voltmeter having a sensitivity of 20,000 ohms per volt except where indicated by (*). The (*) symbol designates a vacuum tube voltmeter measurement.
2. Dial tuned to maximum counter-clockwise position.

BOTTOM VIEW OF CHASSIS

117 VOLT 60 CYCLE A. C. POWER SUPPLY USED FOR THESE MEASUREMENTS.

ALL VOLTAGES MEASURED BETWEEN SOCKET TERMINALS AND B- LUG UNLESS OTHERWISE INDICATED.

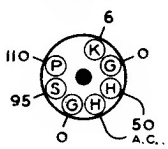

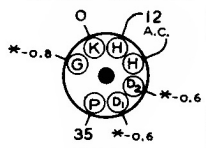

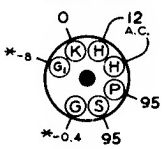

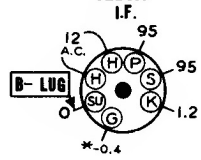

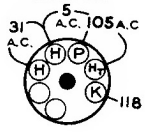

REAR OF CHASSIS