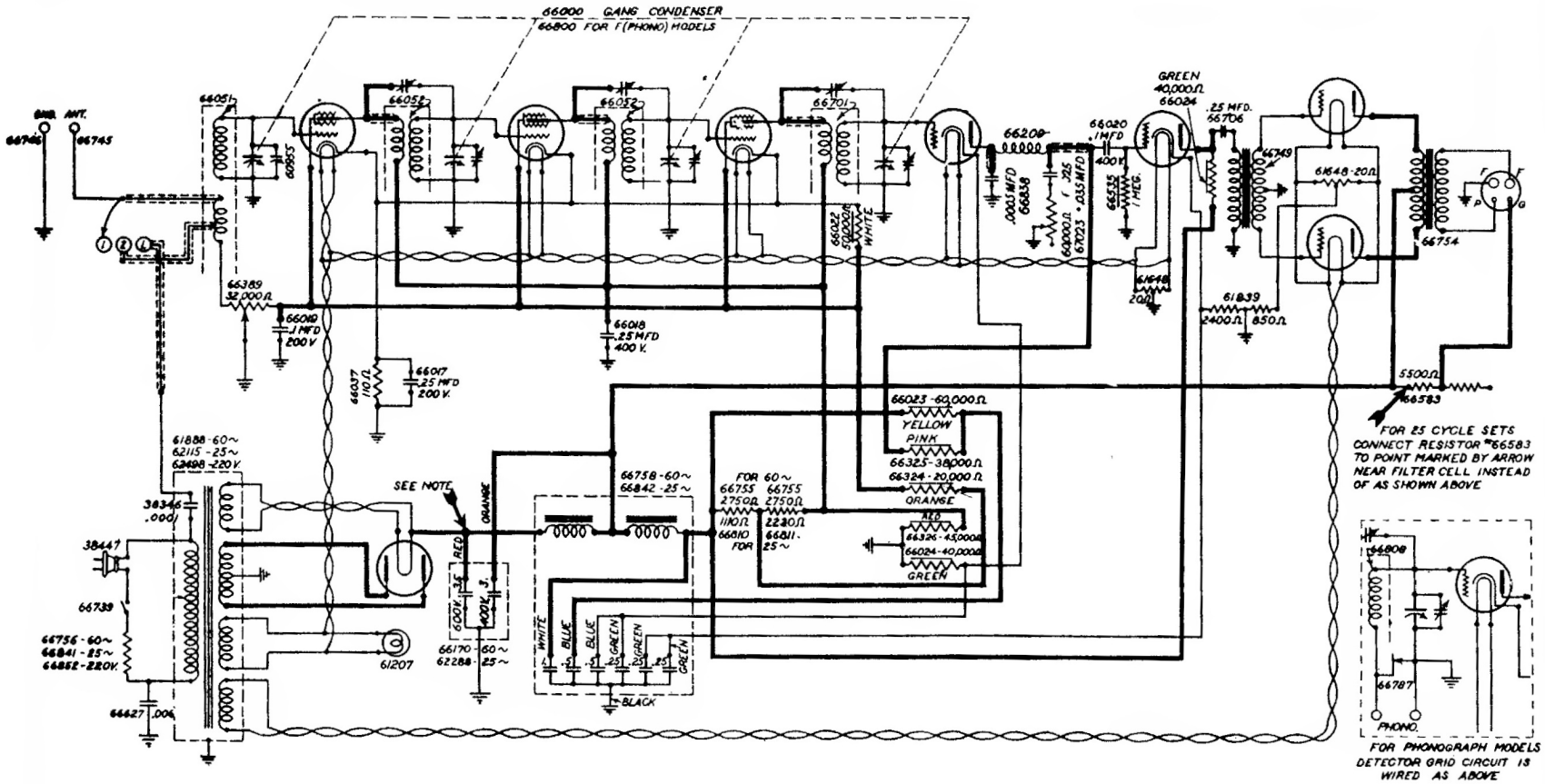

Stewart-Warner Model R-100-A, B, and E, Alternating Current Sets