Circuit Data of Stewart-Warner Models R-102-A, B & E.*

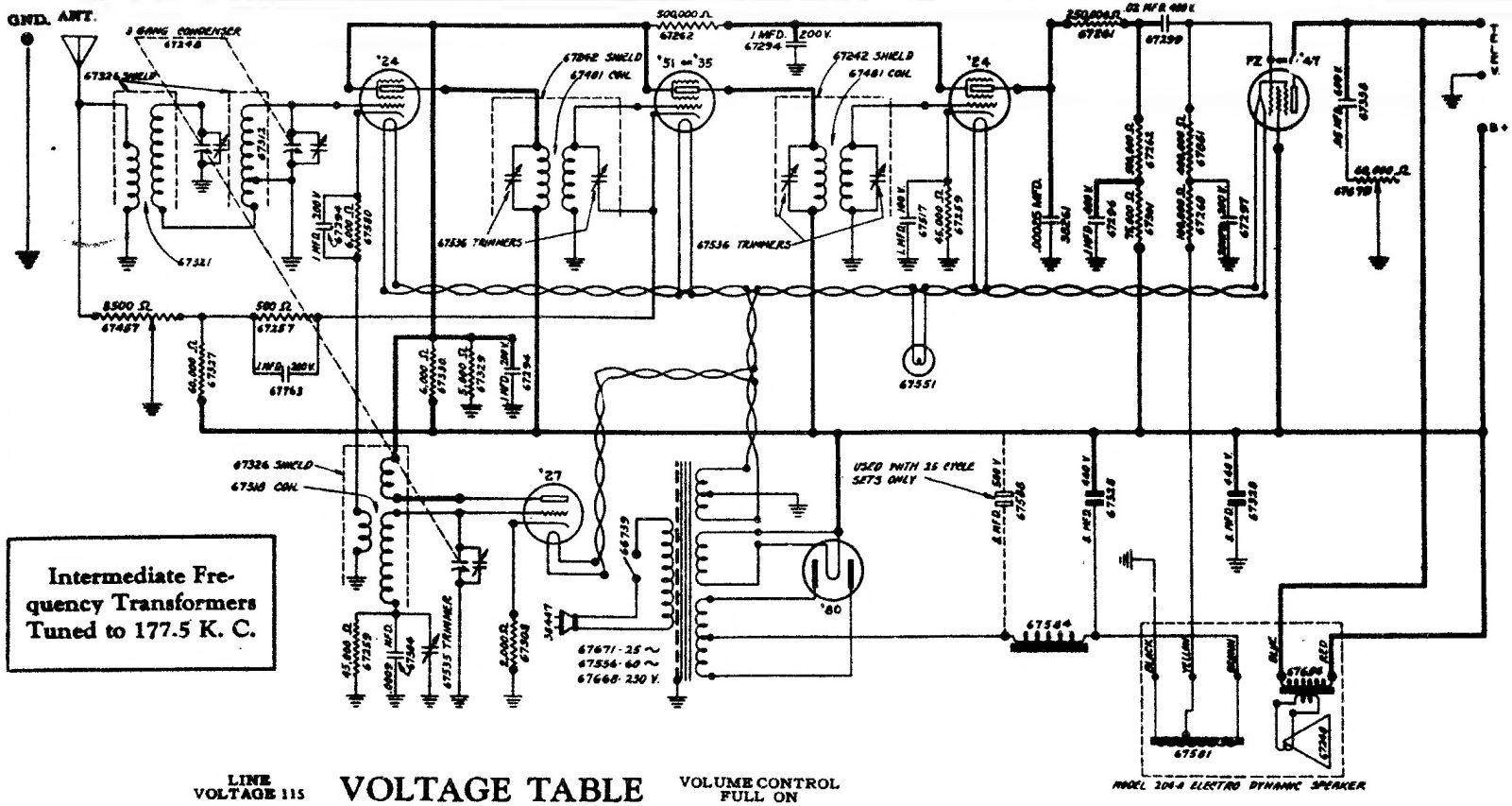

Intermediate Frequency Transformers Tuned to 177.5 K. C.

VOLTAGE TABLE

LINE VOLTAGE 115 — VOLUME CONTROL FULL ON

Type of Tube	Tube Circuit	Filament Voltage	Plate Voltage	Screen Grid Voltage	Bias Voltage
'24	1st Det.	2.45	250	95	6.5
'27	Osc.	2.45	95		9
'51	I. F.	2.40	250	95	3
'24	2nd Det.	2.45	70	30	7
P. Z. or '47	Output	2.45	230	250	15 ‡
'80	Rect.	4.8	170		

All D. C. voltages measured with respect to ground, using high resistance voltmeter of 1000 ohms per volt. Readings will vary, depending upon voltage range of meter, being higher for higher range instruments. This variation is most marked for second detector screen grid and plate voltages.

‡ This reading obtained between ground and yellow speaker lead. Direct reading from grid to ground or reading taken with a set tester will show about 3 volts because of high resistance in grid circuit.

FRONT OF SET

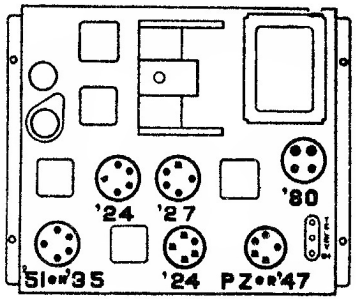

TUBE LOCATIONS