SCHEMATIC DIAGRAM

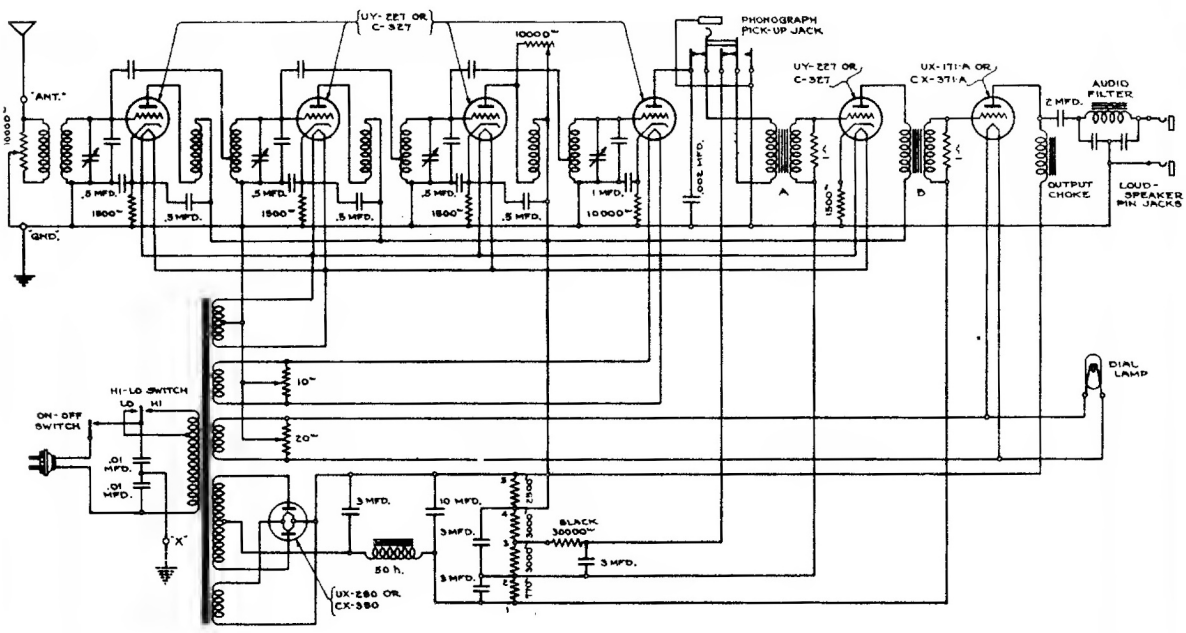

STROMBERG–CARLSON NOS. 635 AND 636 RECEIVERS

The following table shows how the filament, plate and grid voltages vary with different line voltages, in the No. 635 receiver. The plate voltages are measured between tube plates and Tap No. 2 of the voltage divider. The grid voltages of the heater type tubes are measured across the cathode resistors; and that of the audio output tube is measured between Taps No. 1 and No. 2 of the voltage divider.

Line Voltage "HI-LO" Switch	105 "LO"	110 "LO"	115 "LO"	115 "HI"	120 "HI"	125 "HI"
UX-280						
Filament Voltage (RMS)	4.5	4.75	5.0	4.5	4.7	4.93
Voltage per anode (RMS)	236.0	248.0	259.0	236.0	248.0	258.0
Amplifiers						
Heater Voltage (RMS)	2.17	2.27	2.38	2.16	2.26	2.35
Plate Voltage	106.0	110.0	115.0	106.0	110.0	115.0
Grid Voltage	— 5.0	— 5.5	— 5.75	— 4.7	— 5.2	— 5.6
Detector						
Heater Voltage (RMS)	2.11	2.22	2.32	2.1	2.2	2.3
Plate Voltage	39.0	40.0	42.0	38.0	40.0	41.0
Grid Voltage	— 3.25	— 3.5	— 3.75	— 3.25	— 3.5	— 3.75
Audio Output Tube						
Filament Voltage (RMS)	4.5	4.75	5.0	4.53	4.72	4.94
Plate Voltage	167.0	175.0	184.0	165.0	174.0	182.0
Grid Voltage	—37.0	—40.0	—41.0	—36.0	—40.0	—41.0

NOTE—The grid voltage on the 1st audio tube will be slightly lower than that on the R. F. amplifier tubes, due to the drop in the secondary of the 1st audio transformer.