Stromberg-Carlson Service Notes

Battery Portable Radio Receiver BP-1

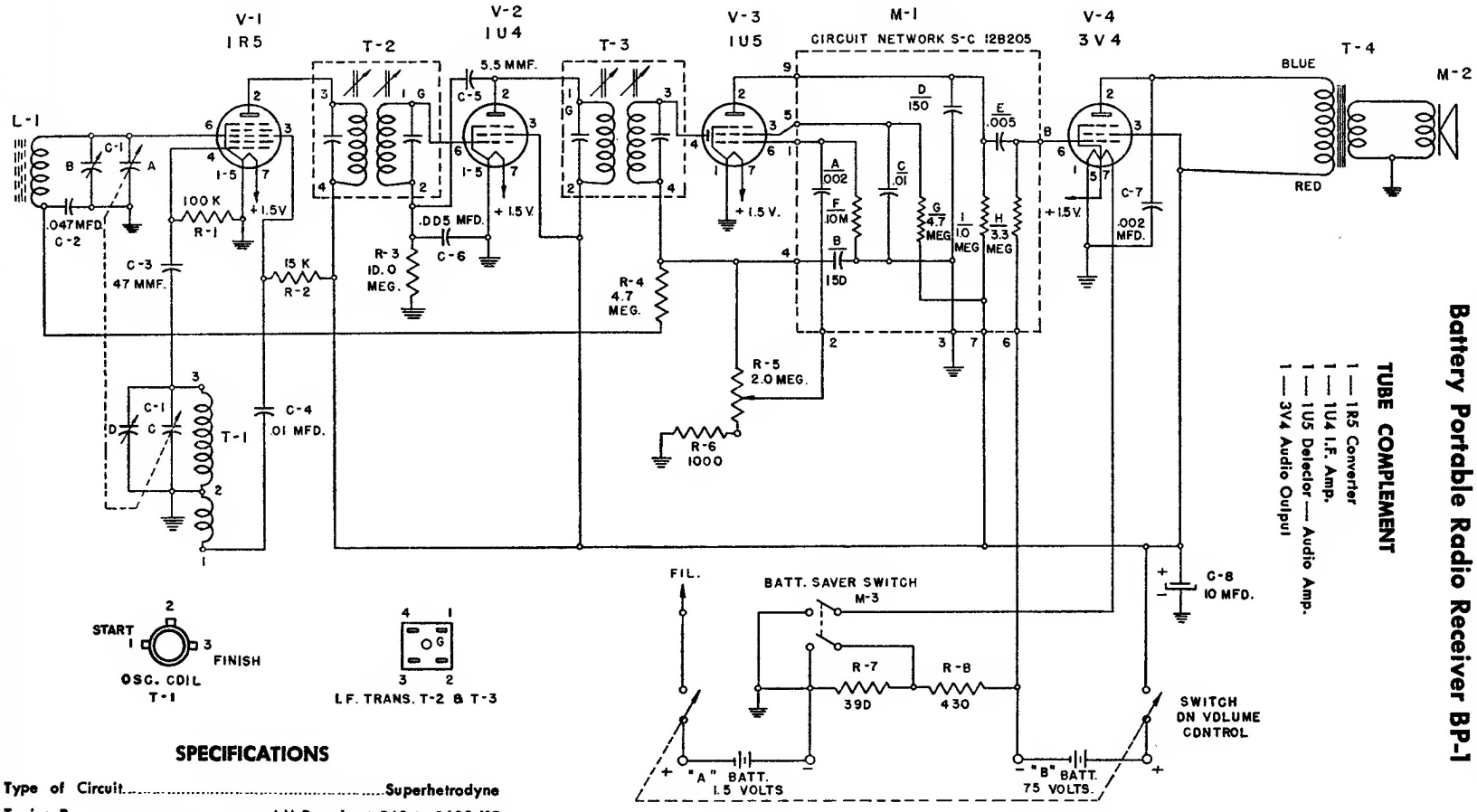

TUBE COMPLEMENT

1 — 1R5 Converter
1 — 1U4 I.F. Amp.
1 — 1U5 Detector — Audio Amp.
1 — 3V4 Audio Output

SPECIFICATIONS

Type of Circuit.....Superhetrodyne

Tuning Range.....AM Broadcast 540 to 1620 KC

Intermediate Frequency.....455 KC

Power Supply — Stromberg-Carlson Battery Kit No. 10, Part No. 141037. Consists of 2 "A" batteries (1.5 volts each) and 1 "B" battery (75 volts) of the following manufacturer types:

MANUFACTURER	"A" BATTERY (1.5 VOLTS)	"B" 75 VOLTS
Eveready	964	437
N.E.D.A.	20	212
Burgess	21 R	XX50
R.C.A.	VS 236	VS 217
General	77	144
Philco	P-77	P-144
Ray-O-Vac	8 R	4375

VOLTAGE CHART

Voltages obtained using VTVM Battery saver switch in full battery position

All voltages are D.C. and are positive with respect to chassis ground except where otherwise noted.

TUBE		FUNCTION	PIN NUMBER						
			1	2	3	4	5	6	7
V-1	1R5	Converter	0	71	42	—7.1	0	—.35	1.45
V-2	1U4	I.F. Amp.	0	70	70	NC	0	—.125	1.45
V-3	1U5	(Detector 1st audio)	0	20.5	19	—.6	NC	—.25	1.45
V-4	3V4	Output	0	67.5	70	NC	1.45	—3.7	0