STROMBERG-CARLSON

CLOCK RADIO RECEIVER—MODELS C-3 C-5

AC-DC Radio Receiver Model T-4 is electrically the same except that the clock circuit is omitted.

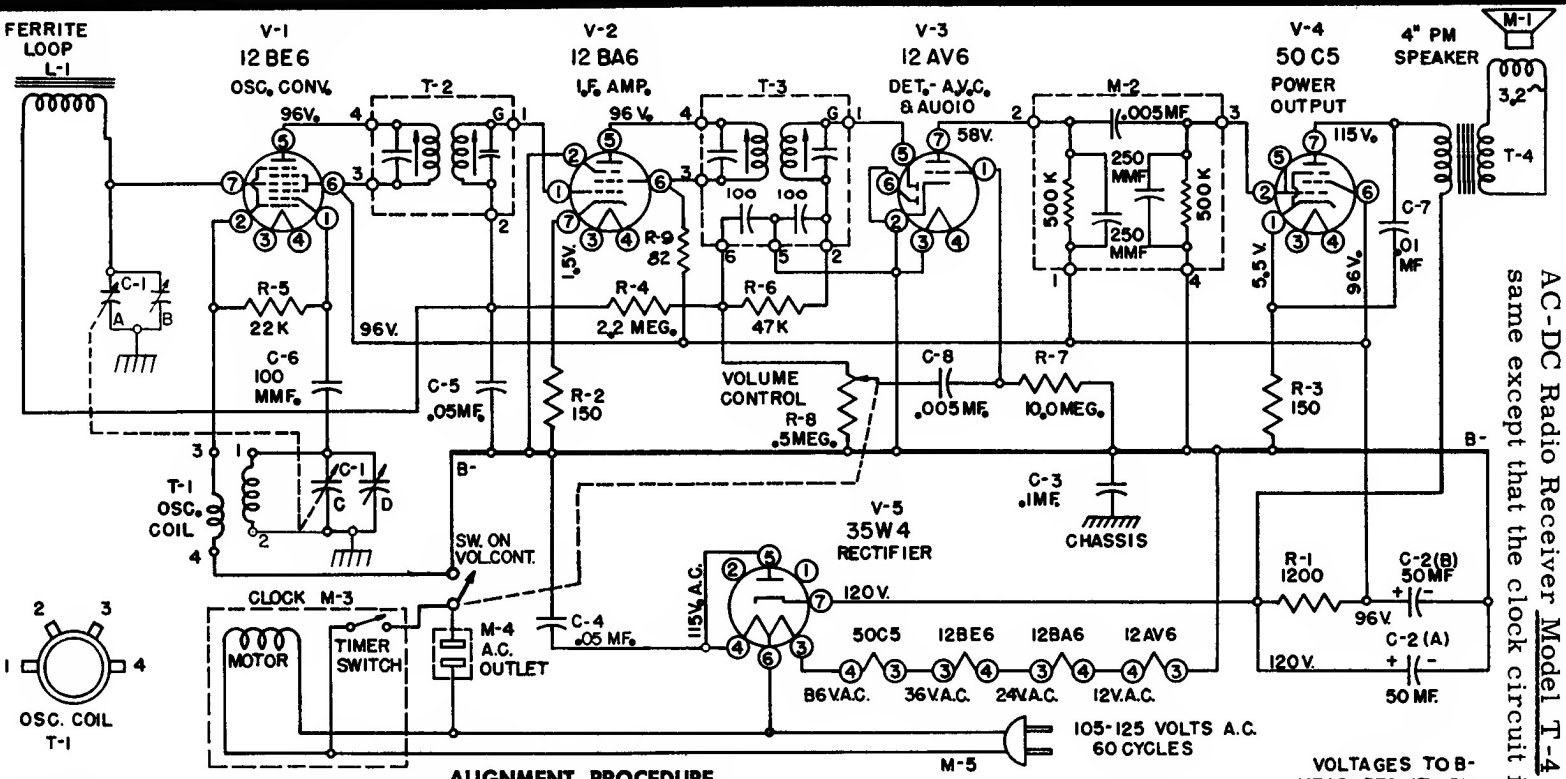

ALIGNMENT PROCEDURE

I.F. Alignment

Receiver volume control set at maximum. Output meter connected across speaker voice coil. Use modulated signal with output level from generator no higher than necessary to obtain indication on output meter. Use non-metallic alignment tool with light pressure on all slugs adjustments.

SIGNAL INPUT	FREQUENCY	DUMMY ANTENNA	TUNING CAPACITOR	ADJUSTMENTS	NOTES
Converter grid (pin 7 of V-1, 12BE6) or stator of C-1-A	455 KC (400 cycles modulation)	.1 mfd	Point of non-interference at mid frequency	Bottom and top slugs of T-2 and T-3	Adjust for maximum output.

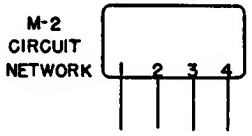

R.F. Alignment

Rotate tuning condenser until fully unmeshed (min. capacity).
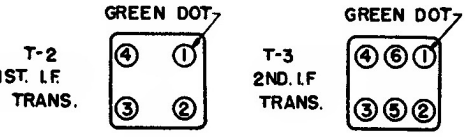
SIGNAL INPUT	FREQUENCY	DUMMY ANTENNA	TUNING CONDENSER	ADJUSTMENTS	NOTES
Converter grid (pin 7 of V-1, 12BE6) or stator of C-1-A	1625 KC	.1 mfd	Fully unmeshed (min. capacity)	Oscillator Trimmer C-1-D.	Adjust for maximum output.
Radiating loop	1400 KC		Tuned to 1400 KC	R.F. Trimmer C-1-B	Adjust for maximum output.