SYLVANIA

Chassis 1-638-1, -2, -3

Models 7P12, 2800, 2900 Series

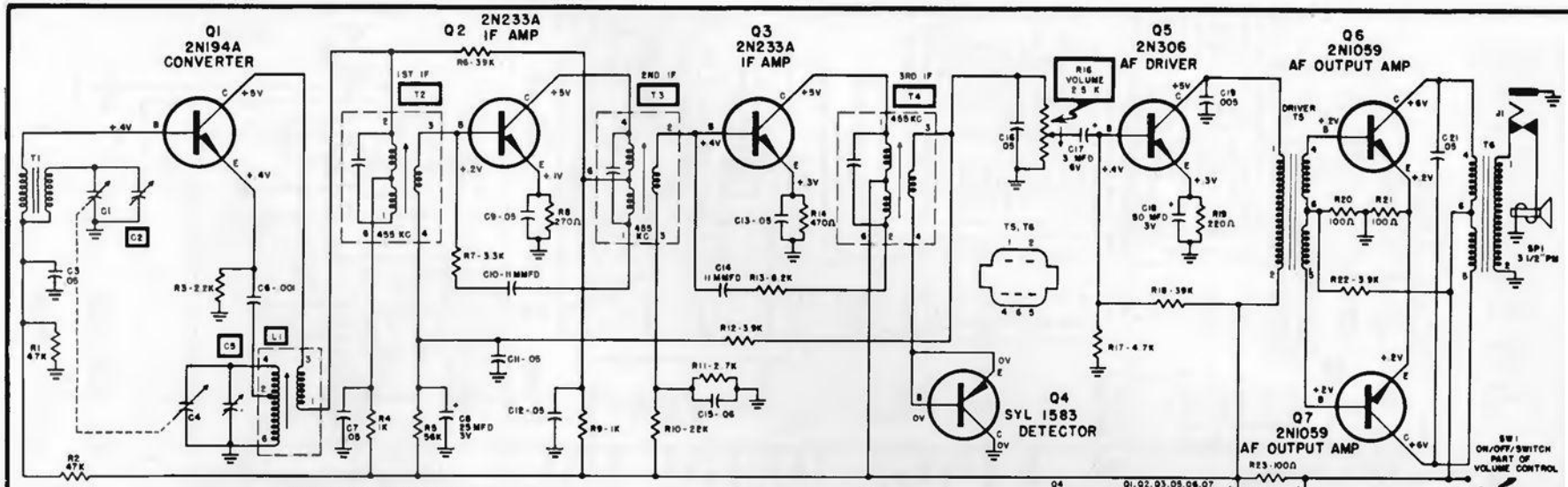

SCHEMATIC NOTES

1. VOLTAGES TAKEN WITH RECEIVER TUNED TO STRONG LOCAL STATION.
2. BATTERY VOLTAGE WITH RECEIVER OPERATING 6V.
3. VOLTAGES SHOWN ARE AVERAGE READINGS. VARIATIONS MAY BE NOTED DUE TO NORMAL PRODUCTION TOLERANCES.
4. RESISTANCE VALUES TAKEN WITH COMPONENTS IN THE CIRCUIT.
5. ALL CAPACITORS IN MICROFARADS UNLESS OTHERWISE SPECIFIED.
6. ⏚ DESIGNATES CHASSIS GROUND.

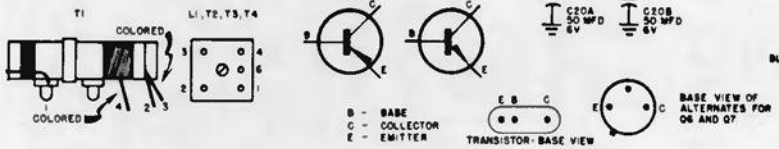

RESISTANCE CHART

L1		T2		T3		T4		T5		T6	
BETWEEN	RES Ω	BETWEEN	RES Ω	BETWEEN	RES Ω	BETWEEN	RES Ω	BETWEEN	RES Ω	BETWEEN	RES Ω
1 & 3	1	1 & 2	5	1 & 4	5	1 & 2	2.5	1 & 2	300	1 & 2	6
2 & 4	4	1 & 6	2.5	1 & 6	2.5	1 & 6	1.5	4 & 5	250	4 & 5	7
2 & 6		2 & 6	2.5	4 & 6	2.5	2 & 6	1.5	4 & 6	125	4 & 6	3.5
4 & 6	4	3 & 4	5	2 & 3	5	3 & 4	1	5 & 6	125	5 & 6	3.5

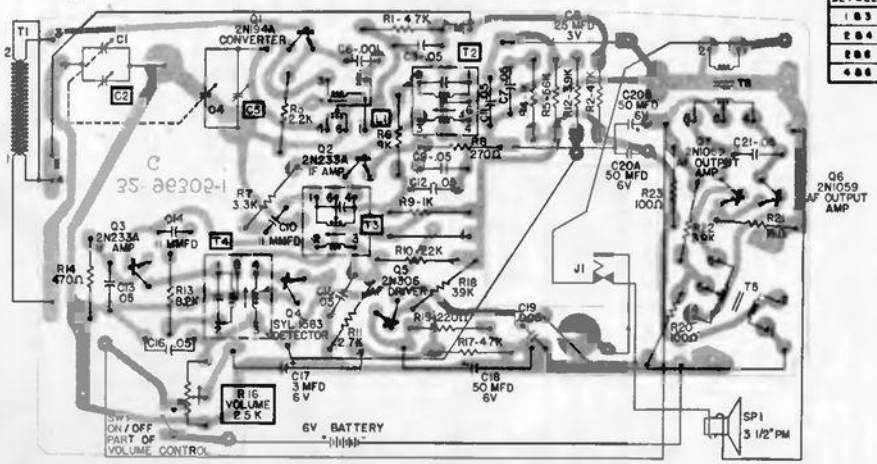

TOP VIEW - PRINTED BOARD ASSEMBLY

CHASSIS REMOVAL

7P12 SERIES:

1. Using a coin or screwdriver, loosen the one (1) screw which secures the backcover to the front of the case. Remove cover as far as speaker leads permit.
2. Remove screw securing tuning knob and remove knob.
3. Remove the three (3) screws securing chassis to case, two at bottom of chassis and one near tuning capacitor.
4. To replace chassis, reverse the above procedure.