SCHEMATIC DIAGRAM-MODEL 918 HI-FI PHONOGRAPH

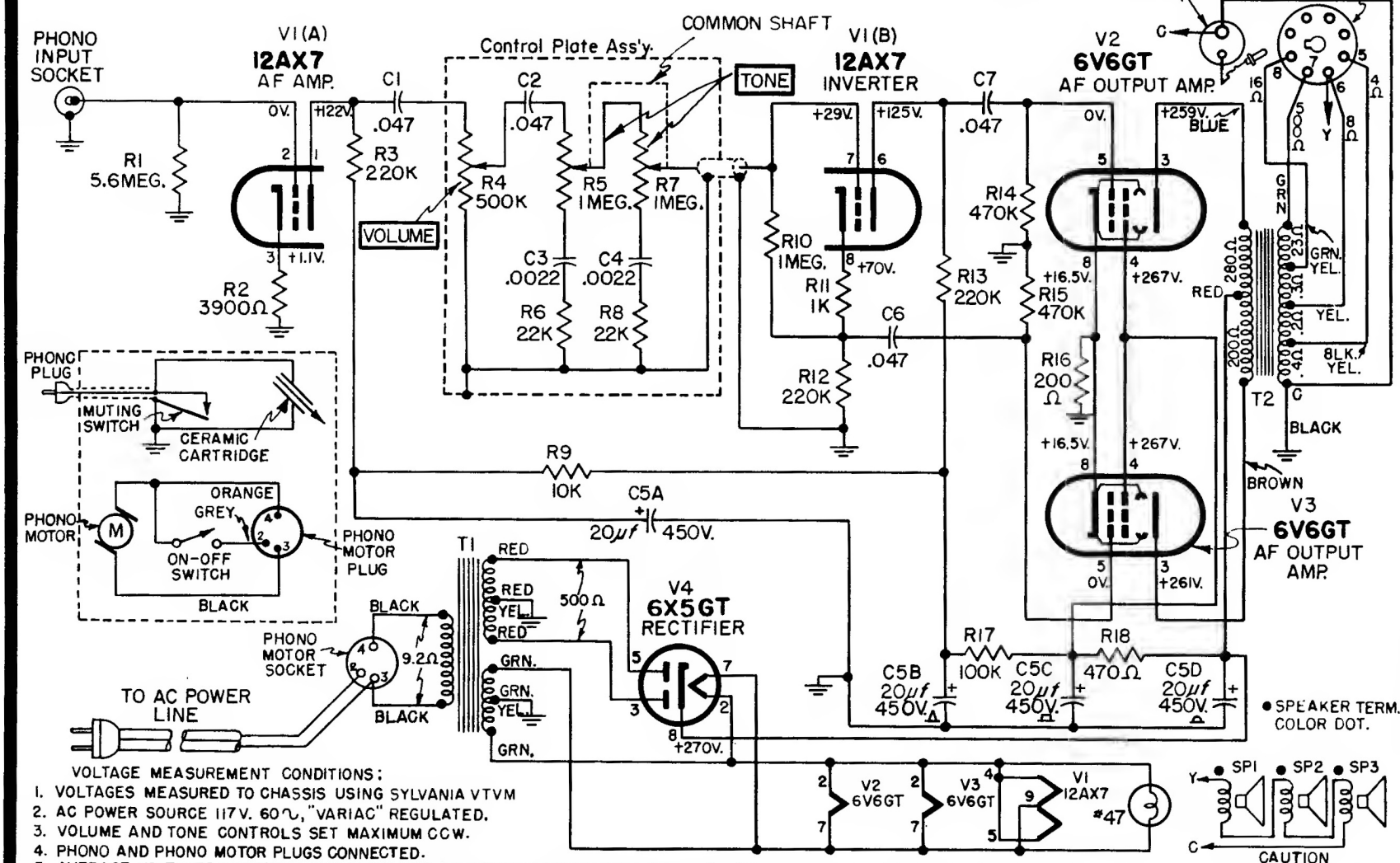

VOLTAGE MEASUREMENT CONDITIONS:

1. VOLTAGES MEASURED TO CHASSIS USING SYLVANIA VTVM
2. AC POWER SOURCE 117V. 60∿, "VARIAC" REGULATED.
3. VOLUME AND TONE CONTROLS SET MAXIMUM CCW.
4. PHONO AND PHONO MOTOR PLUGS CONNECTED.
5. AVERAGE VOLTAGES INDICATED ARE PREPARED AS SERVICE REFERENCE ONLY. VARIATIONS WITHIN LIMITS WILL BE OBSERVED.

RESISTANCES: AVERAGE RESISTANCES OF TRANSFORMERS ARE INDICATED AND TAKEN WITH COMPONENT CONNECTED IN CIRCUIT.

Sylvania Electric Products Inc., Radio & Television Div., Service Dept., Buffalo 7, N.Y.