UNITED MOTORS

Chevrolet Truck Model 987187

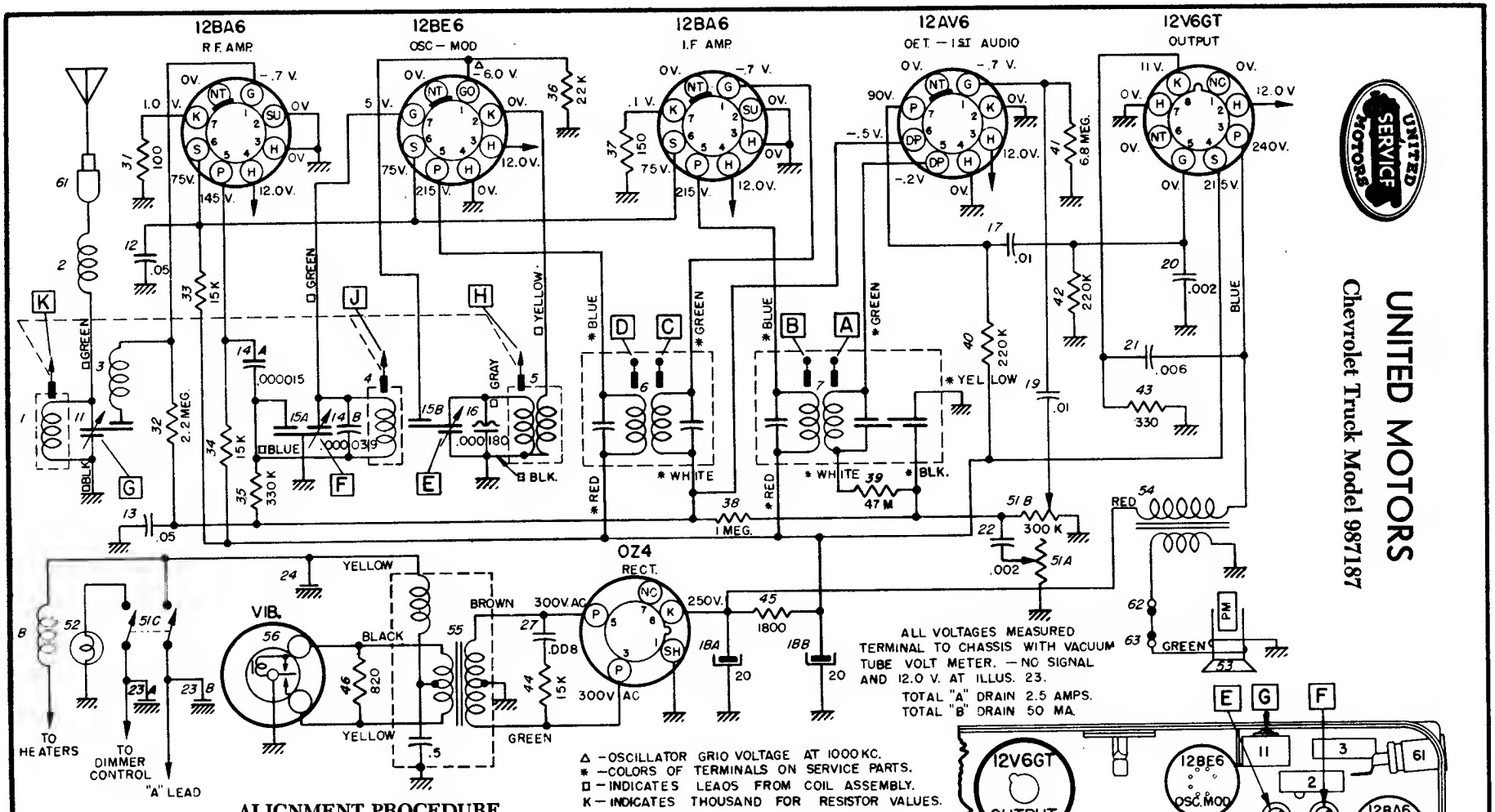

ALIGNMENT PROCEDURE

Steps	Series Capacitor or Dummy Antenna	Connect Signal Generator to	Signal Generator Frequency	Tune Receiver to	Adjust in Sequence For Max. Output
1	0.1 Mfd.	12BE6 Grid (Pin #7)	262 KC	High Frequency Stop	A, B, C, D
2	0.000082 Mfd.	Antenna Connector	1615 KC	High Frequency Stop	*E, F, G
3	0.000082 Mfd.	Antenna Connector	1000 KC	Signal General Signal	J, K
4	0.000082 Mfd.	Antenna Connector	1615 KC	High Frequency Stop	F, G
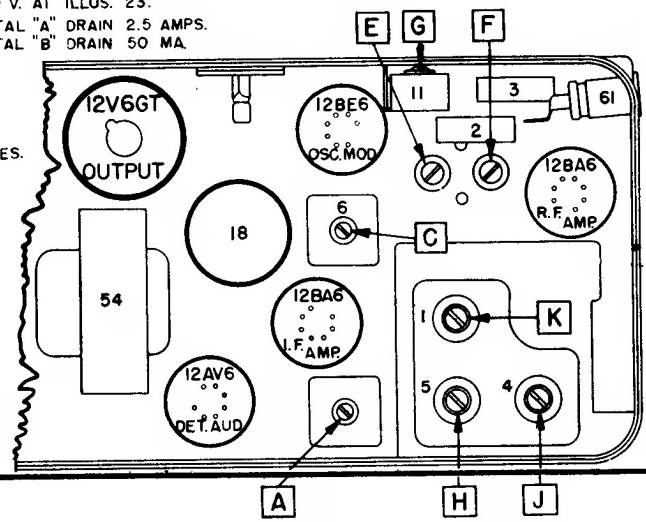
*Before making this adjustment check mechanical setting of oscillator core "H." The rear of the core should be $1\frac{25}{32}$" from the mounting end of the coil form. (This measurement is readily made by inserting a suitable plug in the mounting end of the coil form.) Core adjustment should be made with an insulated screw driver.