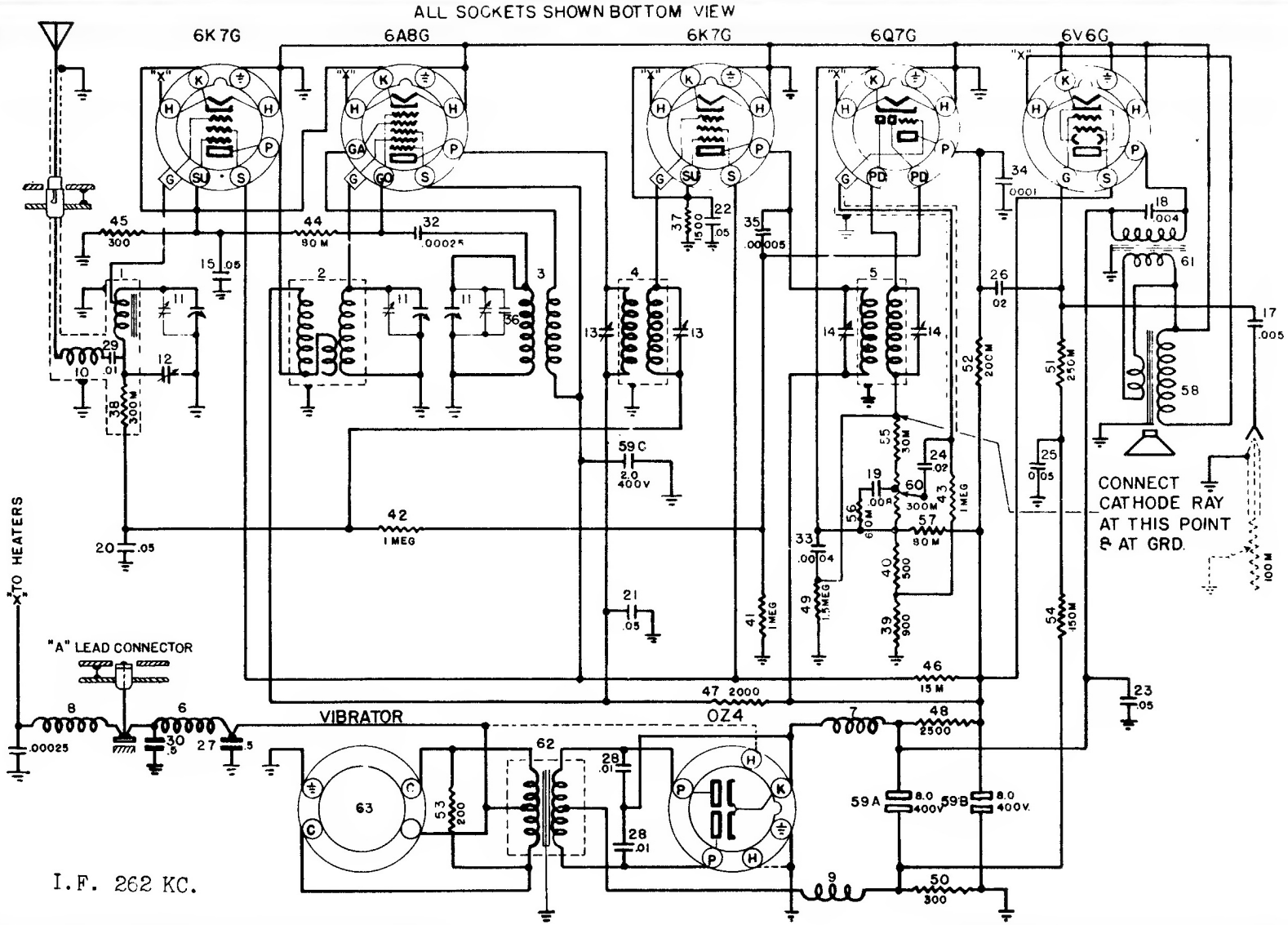

DELCO MODEL R-665 CIRCUIT DIAGRAM