Westinghouse H-424P4 H-425P4 H-422P4 H-423P4

CHASSIS V-2188-1

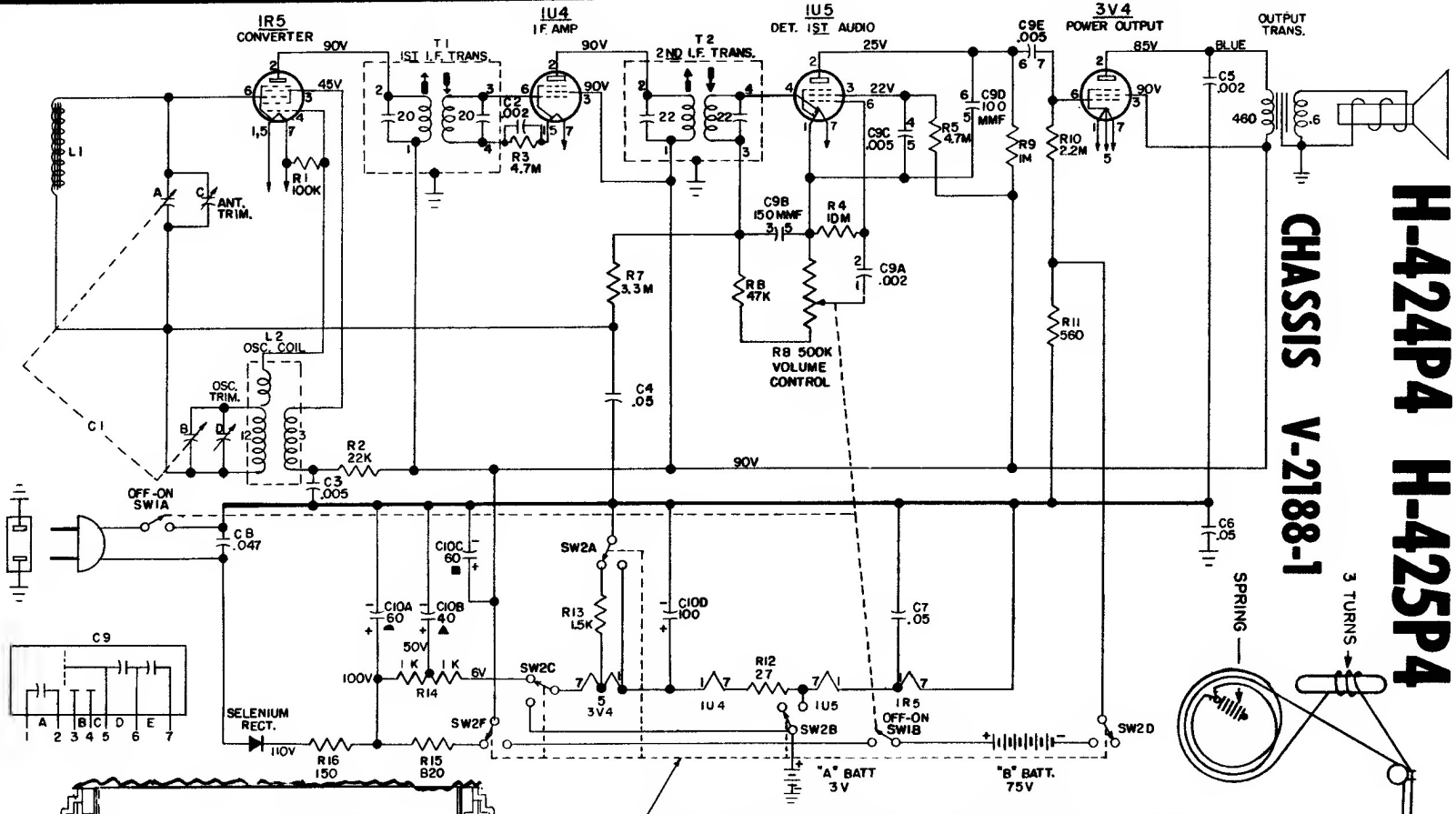

SW2 IS CONTROLLED BY LINE PLUG - SHOWN IN NON-ACTUATED (PLUG OUT) POSITION.

1. ALL VOLTAGES MEASURED FROM COMMON NEGATIVE USING A 20,000 OHM/VOLT METER. LINE VOLTAGE SET AT 117 V.A.C. READINGS SHOULD BE AS SHOWN ±20 PER CENT.
2. ALL CAPACITANCE VALUES IN MFD AND ALL RESISTANCE VALUES IN OHMS UNLESS OTHERWISE SPECIFIED.

"A" BATTERY	RECOMMENDED "B" BATTERY 75V	OPTIONAL "B" BATTERY 67.5V
EVEREADY NO. 964	EVEREADY NO. 437	EVEREADY NO. 477
BURGESS NO. 21R	BURGESS NO. XX50	BURGESS NO. P45
RAY-O-VAC NO. 8R	RAY-O-VAC NO. 4375	RAY-O-VAC NO. 946