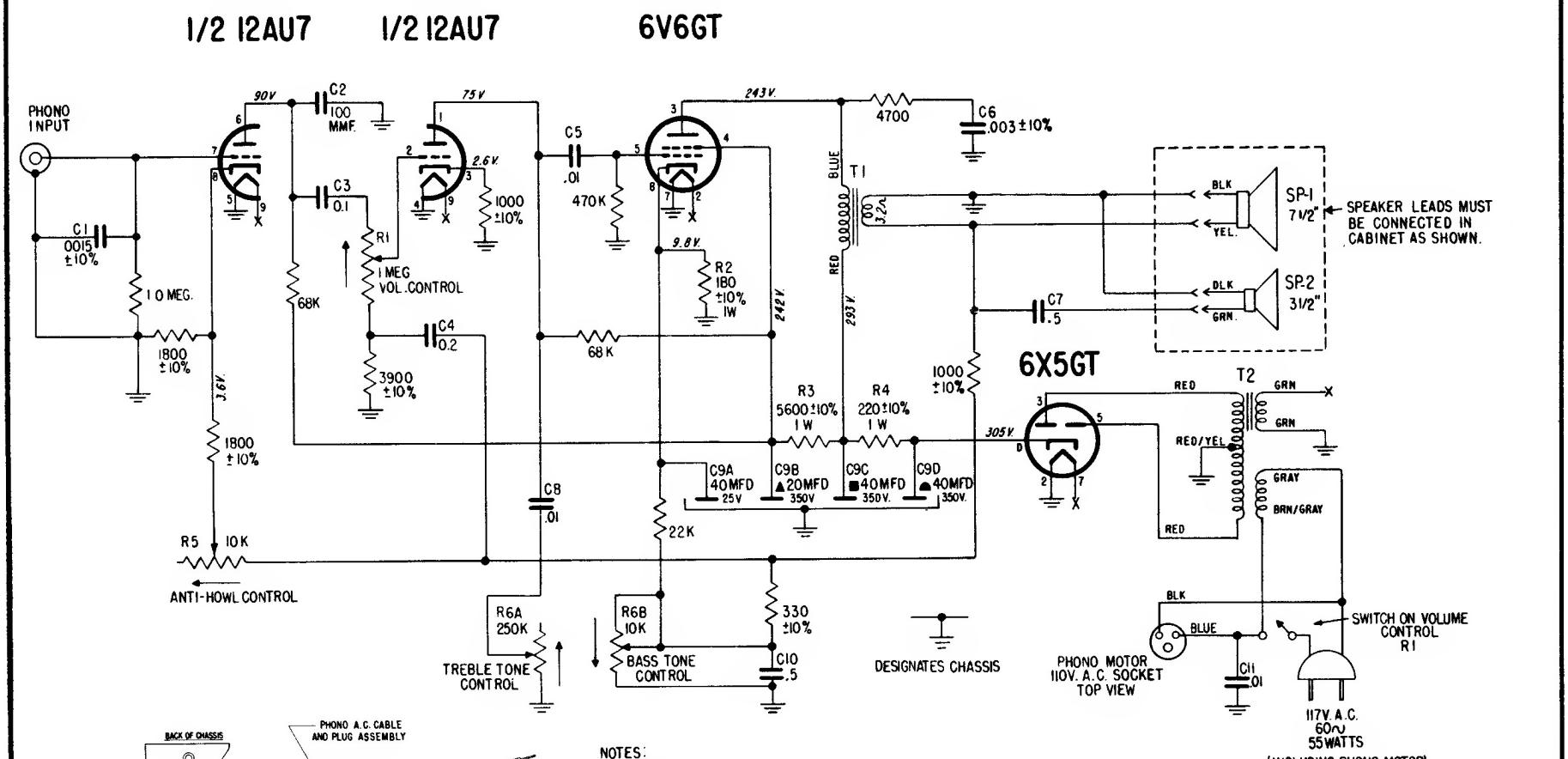

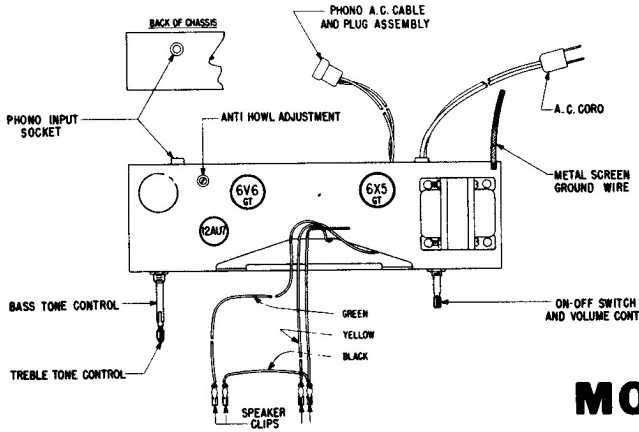

NOTES:

R5 ANTI-HOWL CONTROL TO BE ADJUSTED FOR 1.0V. OUTPUT AT THE TERMINALS OF THE 7 1/2" SPEAKER, USING THE 1000 CYCLE GROOVE OF A CLARKSTAN N.A.B. FREQUENCY RECORD NO. 2001S, WITH THE VOLUME CONTROL IN THE MAXIMUM CLOCKWISE POSITION AND THE TONE CONTROLS IN THE MAXIMUM COUNTER-CLOCKWISE POSITION.
ARROW INDICATES CLOCKWISE ROTATION.
ALL RESISTORS ARE ±20% TOLERANCE UNLESS OTHERWISE SPECIFIED.
ALL VOLTAGES ARE D.C. UNLESS OTHERWISE SPECIFIED AND ARE MEASURED FROM POINTS INDICATED TO CHASSIS WITH AN A.C., D.C. VACUUM TUBE VOLTMETER WITH ANTI-HOWL CONTROL IN THE MAXIMUM CLOCKWISE POSITION.

ZENITH RADIO CORPORATION

MODELS HFX14 AND HFX14E CHASSIS 3Y03