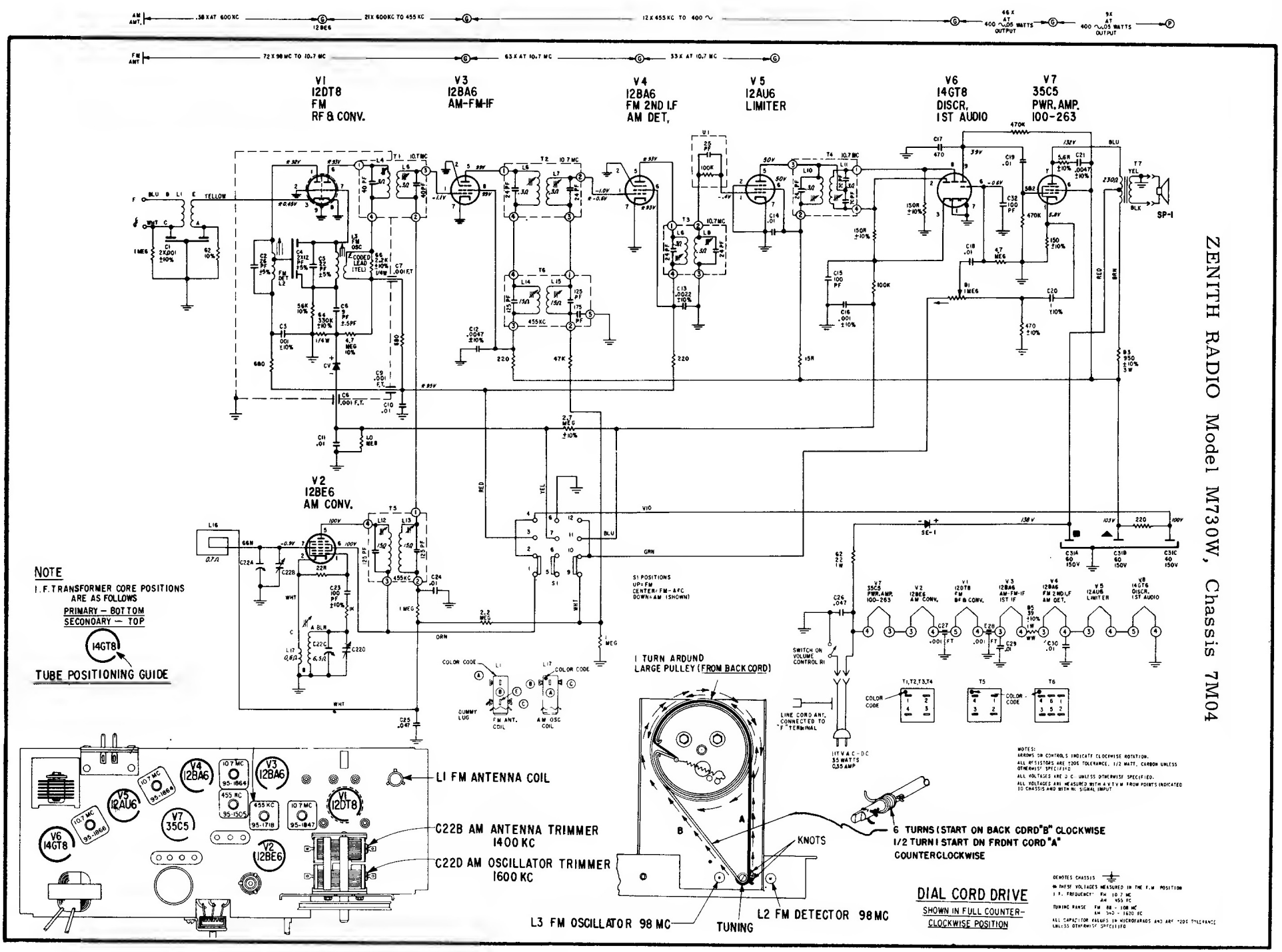ZENITH RADIO Model M730W, Chassis 7M04