ZENITH RADIO CORPORATION MODELS Z522, G, V & R CHASSIS 5Z03

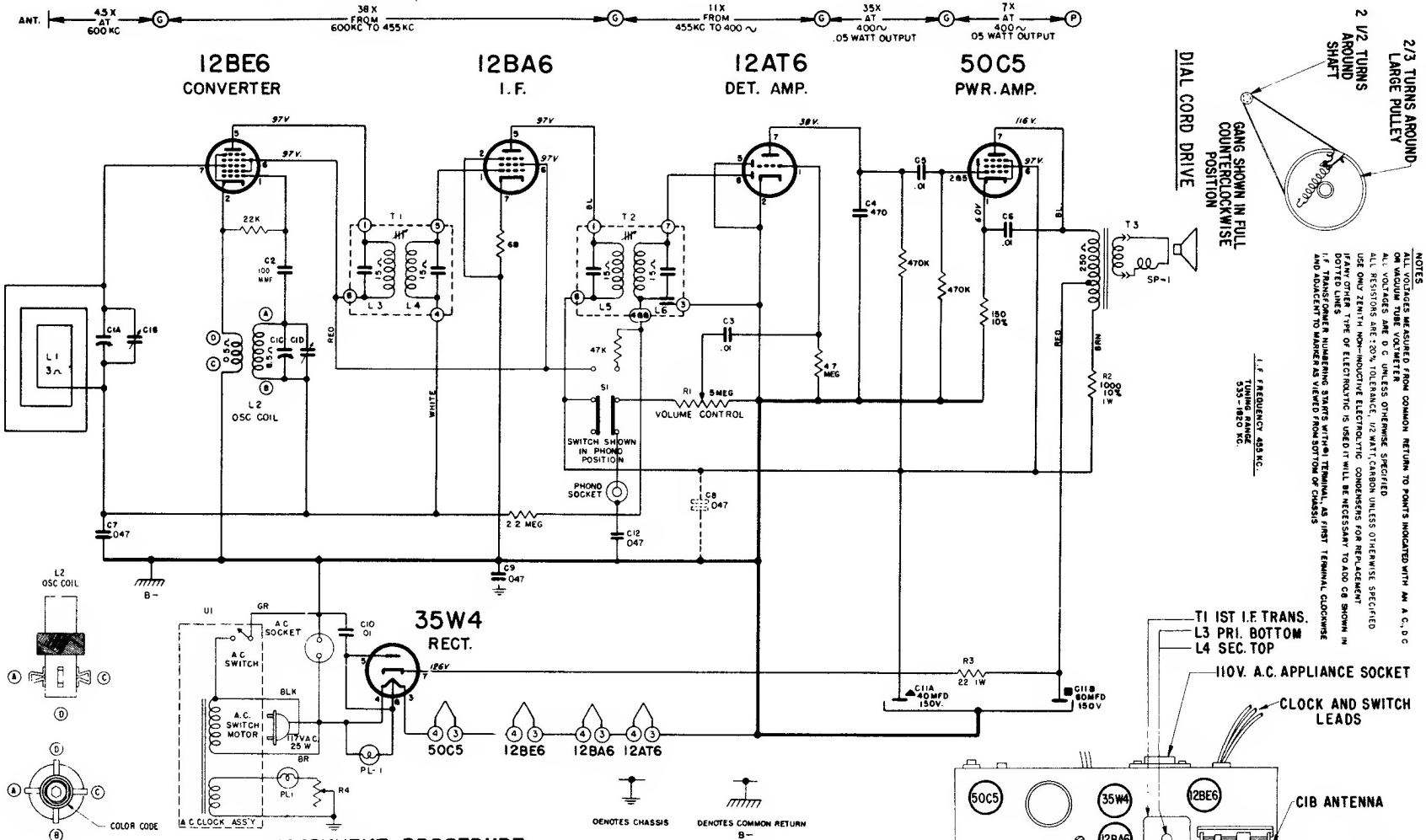

ALIGNMENT PROCEDURE

Operation	Connect Oscillator To	Dummy Antenna	Input Sig. Frequency	Set Dial At	Trimmers	Purpose
1	Converter Grid	.5 Mfd.	455 Kc.	600 Kc.	L3, L4, L5, L6	For I.F. Alignment.
2	One Turn Loop Coupled Loosely to Wave Magnet	—	1600 Kc.	1600 Kc.	C1D	Set Oscillator to Dial Scale
3		—	1400 Kc.	1400 Kc.	C1B	Align Antenna Stage