AUG. 1971. VOL8

JVC

DISCRETE 4-CHANNEL RECORD CD-4 SYSTEM



TECHNICAL INFORMATION & OPERATION

CONTENT

1. Introduction
2. Technical Information of "CD-4" 4-Channel Record — Page
   1) CD-4 Record 2
   2) Outline of CD-4 2-3
      ■ Recording Process
      ■ Playback Process
      ■ The Rating of Standard Demodulator
   3) Various Techniques adopted for "CD-4" 4-7
      ■ Modulated Recording System
      ■ Low Speed Cutting
      ■ Carrier Level Controller
      ■ The Rating of Cutting System
   4) Neutrex 8
   5) Automatic Noise Reduction System 8-9
   6) Shibata Stylus 10
3. Operation of CD-4 Record
   Front & Rear Panel 11-12
   A) Record Player 13
   B) CD-4 Demodulator 13
   C) How to play a 2-channel Stereo Record 13
4. Attentions for CD-4 Playing 14

1. Introduction

1. CD-4 Discrete 4-Channel Record Made Commercially Available

In September 1970, JVC successfully developed the CD-4 Discrete 4-Channel Record for the first time in the world. Ever since that time JVC has been devoting itself to improvement of the new record as a system, and aggressively engaging in the establishment of international standards on the record and the cultivation of the field of 4-channel record music.

On June 30, 1971, JVC puts on sale the world-awaiting CD-4 discrete 4-channel records and associated equipment. JVC wishes everyone concerned to render criticism and assistance to advance the 4-channel record music.

As you may well know, JVC's CD-4 discrete 4-channel record is the only one of its kind commercially available anywhere in the world at present.

2. Standardization of CD-4 Record

Standards on the CD-4 discrete 4-channel record have been examined by the Technical Committee of the Japan Record Association since 1970, and have been concluded into "Discrete 4-Channel Record Standards (draft)". These proposed standards were presented to and received at the joint meeting of the EIA and RIAA which was held on April 27, 1971, to discuss standards concerning the 4-channel record. In Europe, the tentative Japanese standards were formally presented to and received by West Germany's DIN Standard Committee on March 28, this year.

Thus, steps have been taken to make the discrete 4-channel record a world-wide standard. JVC has already received many inquiries from various concerns throughout the world regarding the techniques and patents concerning the CD-4.

In the past JVC has been consistent with its company policy "contribution to culture and service to society". Especially, through its musical field of business, JVC has been creating new sounds and introducing the world of music to all music lovers under the JVC motto "dream to the life, music to the family". JVC is proud of reproducing with fidelity the intention of many musicians and performers fostered through long tradition and history, and delivering the reproductions to more people in wider areas. JVC firmly believes that the company's duty is to service both the musician and the audience by creating new sounds for a new age. The devotion of JVC to guarding traditional sounds as well as creating new ones for satisfying all music lovers has now given rise to the CD-4 discrete 4-channel record system as one of the company's major achievements.

2. Technical Information of CD-4 4channel Record

We have been producing 4-channel Open Reel Tape Recorder and 4-channel Stereo-8 on the following basic principles;

1. High Fidelity (high fidelity transmission of the original sound field by each of 4-channels)
2. Discreteness (better separation of each channel from another than in an usual stereo)
3. Compatibility (Play-back of the usual stereo source also)
4. Economy (Inexpensive, simple software and hardware)
5. Standarlization (Standard and compatible system all over the world)

Embracing these five distinctive qualities, we have now converted 4-channel record, CD-4, into commercial basis.

1) CD-4 Record

The record has an advantage from the economical point view. Its play-back system has been simplified and made less expensive by adopting special techniques for recording and cutting system.

To achieve "high fidelity", "discreteness" and "compatibility", we have made many epochal developments on which some 90 patents are pending.

High fidelity and discreteness are essential for a musician to express his music freely and then to reproduce it just as he has intended for audiophile to enjoy at home.

Music is a language common to all nations and viewed from frequent exchange of program source internationally and to popularize it among general households, standardization is inevitable.

We have named this system CD-4, taking "C" from compatibility, D from discreteness and 4 from 4-channel.

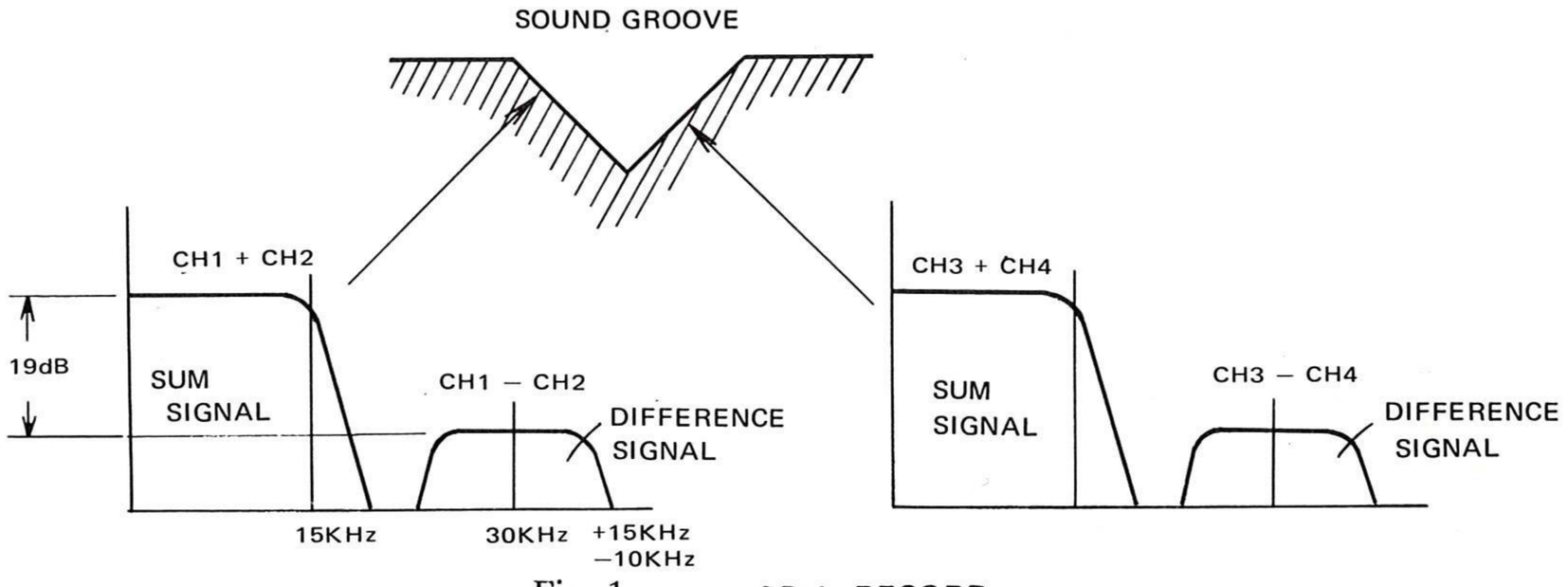

Fig. 1 CD-4 RECORD

2) Outline of CD-4

In 4-channel record, CD-4, four kinds of sound are recorded in a groove, but both walls of the groove is at an angle of 45° – same as 45-45 system used in the conventional 2-channel stereo record.

However, as indicated in Fig. 1, two signals are recorded in both walls. One is the sum signal of two channels and the other, frequency-modulated difference signal.

Recording and playback systems of CD-4 will be explained separately.

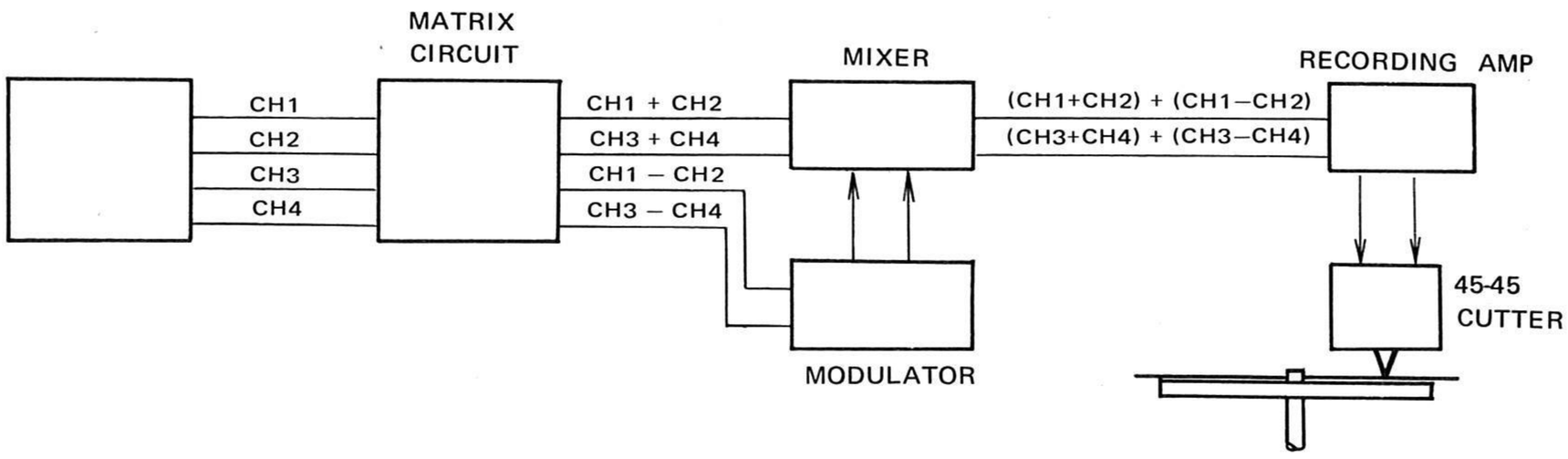

Fig. 2 RECORDING OF CD-4

Recording Process

4-channel signals are converted into sum Signals and difference signals through matrix circuits.
The sum signals are recorded in the same way as in a usual 2-channel record, while the difference signals are modulated (the carrier frequency is 30 KHz) and then added-to the sum signals. (Shown in Fig. 2)
Regarding to the difference signal, the ranges lower then 80 Hz and higher than 6 KHz are frequency modulated (FM), and a range between 800 Hz and 6 KHz is phase modulated (PM).

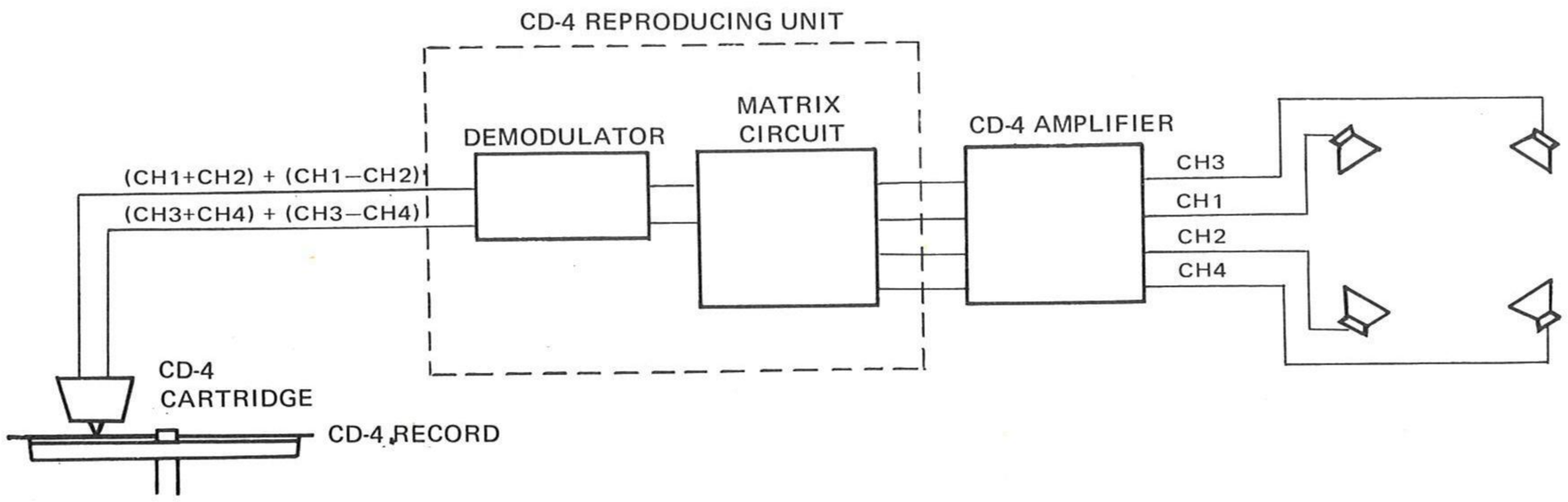

Fig. 3-1 REPRODUCE OF CD-4

Playback Process

Picked up sum signals and modulated difference signals are led into the demodulator, which demodulates the modulated difference signals to change them into audio signals as well as sum signals.

The following matrix circuits reconvert those signals into the original 4-channel signals. They are amplified discretely and then drive the speakers. (shown in Fig. 3-1)

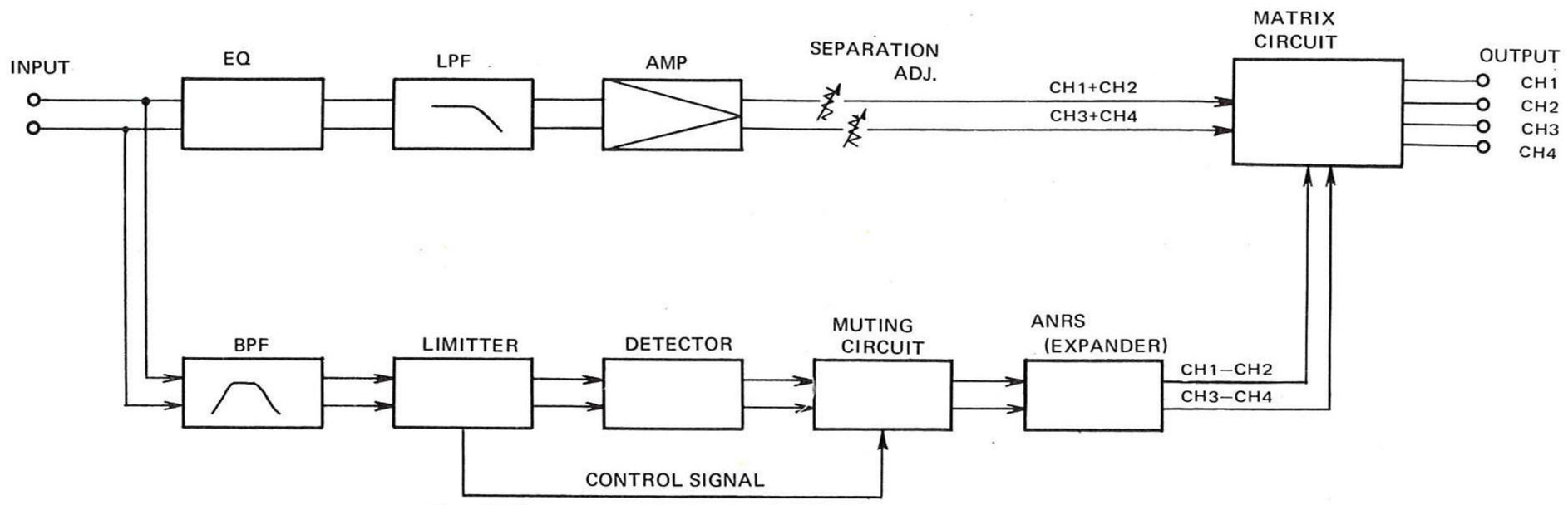

Fig. 3-2 DEMODULATOR BLOCK DIAGRAM

The Rating of Standard Demodulator

Reference input level:	−50dBm (+15, −10)
Frequency response:	
(Direct)	30−15,000Hz $^{+0}_{-0.2}$ dB
(Defference)	30−10,000Hz $^{+0}_{-2}$ dB
Distortion:	Below 0.5% at 700Hz OVU
S/N:	Above 70dB
Dynamic range:	Above 85dB at 700Hz
Separation:	CH1⇌CH2 Above 40dB
	CH3⇌CH4 Above 40dB
SEA:	Included
Output level:	0dBm (600 balanced)
Power consumption :	20VA
Power requirement:	100−240V, 50/60Hz

1. The Frequency in the parenthesis is the one in the case of 1/2.7 cutting process.
2. OVU stands for Reference Input level.

3) Various Techniques adopted for "CD-4"

(3) Various Techniques adopted for "CD-4"

In order to realize our basic 4-channel play-back policies, we have developed various new techniques, especially for the recording and cutting process to simplify the play-back system.

The following six items are the most important.

1. Modulated Recording System
2. Low Speed Cutting (LSC)
3. Carrier Level Controller (CLC)
4. Newtrex
5. Automatic Noise Reduction System (ANRS)
6. Shibata Stylus

The diagram below shows the relation between these techniques and the basic policies.

Policy	Techniques
High Fidelity	2, 3, 4, 5, 6,
Discrete	1, 6,
Compatibility	1, 5,
Economy	1, 3, 4,

■ Modulated Recording System

The system is an equipment to make both sum and difference signals multiplex.

The block diagram is shown in Fig. 4.

The picture 1 shows the system and the picture 2, a certain example of the modulated signal wave.

This system contains many remarkable features such as CLC, Neutrex and ANRS.

But first let us explain the modulation process.

The merits of the modulation system are as follows.

1) The carriers of both channels are completely synchronized by one master oscillator.
2) FM carrier signals (11.1 KHz at the recording process and 30 KHz at the play-back process) are obtained dividing and beating down the high frequency of the master oscillator (933.33KHz) ty 9/28.
3) Sum signals are delayed 108 μS (40 μS at the play-back process) than the difference signals by applying delay circuit in the sum signal patt.

Consequently

1) There are no beats caused by mutual interference between two modulated signals.
2) Distortion of the detected output of modulated signal, which is caused by the cross-talk between two modulated signals is minimized.
3) Dynamic range is wide and distortion is small.
4) Separation between two signals, reconverted from sum signal and detected difference signal is maximized.

We have therefore improved four quality remarkably.

Serrasoid Frequency Modulator is adopted for a modulation cir cuit because one master oscillator is used.

■ Low Speed Cutting

We execute 1/2.7 Low Speed Cutting to cover a wider frequency range, which cannot be covered through usual cutting process.

This is illustrated in Fig. 5.

This cutting satisfies the frequency range condition.

In order to get higher fidelity cutting, we have improved the techniques shown in the lower part of Fig. 5.

Here's the summary

1. Small ramble, wow and flutter of a cutting machine.
2. Use of cutter drive amplifier compensated frequency and phase characteristics.

■ Carrier Level Controller

In "CD-4" system, sum signals in audible range and modulated difference signals are recorded together.
The level of modulated difference signal has the optimal value governed by the sum signal level and the cutting radius of the groove.
Of the two, the level of sum signal effects much severe so we always detect the original 4-signal levels and control the carrier level automatically.
To get the optimal control timing we use an advanced head of a tape recorder to detect original 4-signal levels.
As a result we can play back difference signal from the outer side to the inner side of a disc stably. (shown in Fig. 6)

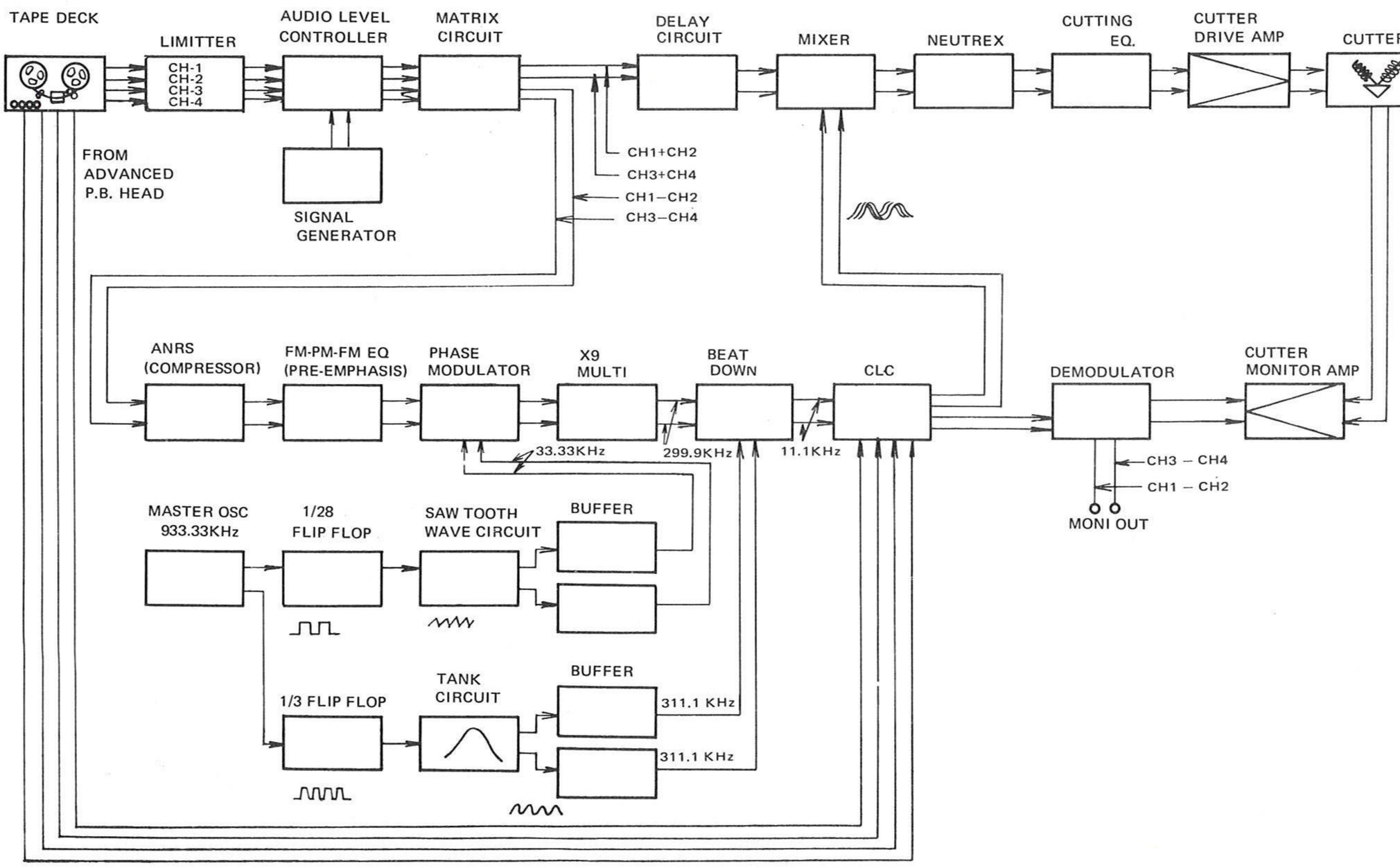

Fig. 4 CD-4 RECORDING SYSTEM BLOCK DIAGRAM

The Rating of Cutting System (see Fig. 4)

Direct signal process

Frequency response:	30–15,000Hz (11–5,560Hz) $^{+0}_{-1.5}$ dB
Distortion:	Below 0.1%
S/N:	More than 80dB
Dynamic range:	Above 110dB

Difference signal process

Frequency response:	30–13,000Hz (11–4,800Hz) $^{+0}_{-3}$ dB
Distortion:	Below 0.2% at 700Hz (260Hz) OVU
S/N:	Above 70dB
Dynamic range:	Above 90dB

Modulation process

Carrier frequency:	30KHz (11KHz)
Maximum deviation:	10KHz (3.7KHz)
Maximum modulation index:	27
Frequency response:	30–13,000Hz (11–4,800Hz) $^{+0}_{-3}$ dB
Distortion:	Below 0.2% at 700Hz (260Hz) OVU
S/N:	Above 70dB
Dynamic range:	Above 90dB at 700Hz (260Hz)
Separation:	L – R more than 50dB R – L more than 50dB
Stability of carrier frequency:	1×10^{-5} /DAY
Delay time of Sum signal:	40 μS (108 μS)
Input signal level:	0dB (600 Ω Balanced)
Output signal level:	0dBm (Direct signal) –19dBm(Modulated signal) 600Ω Balanced
Monitor output:	–10dBm(600 Ω Balanced)
CLC time constant:	450m sec

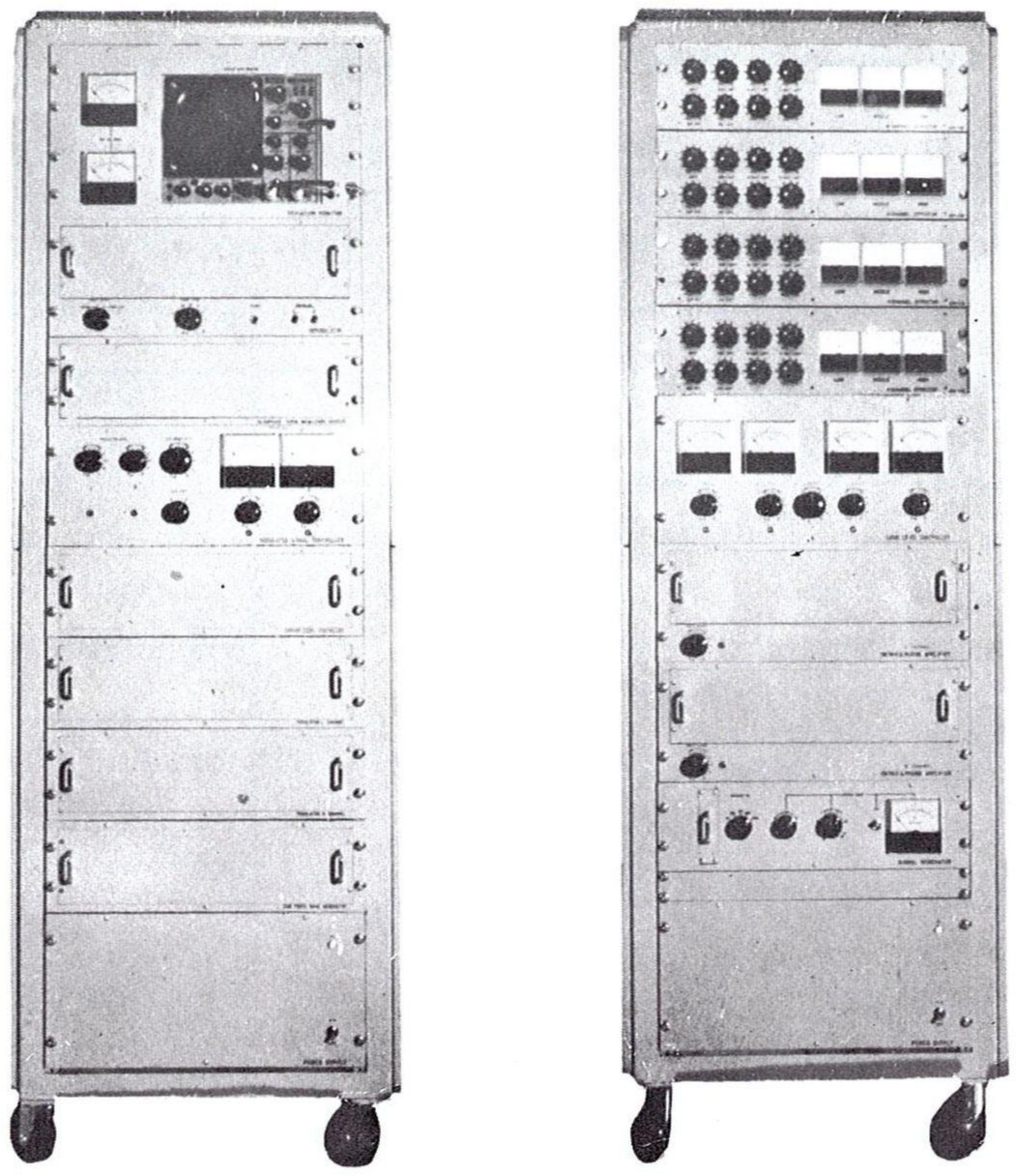

Picture 1 Modulated Recording System

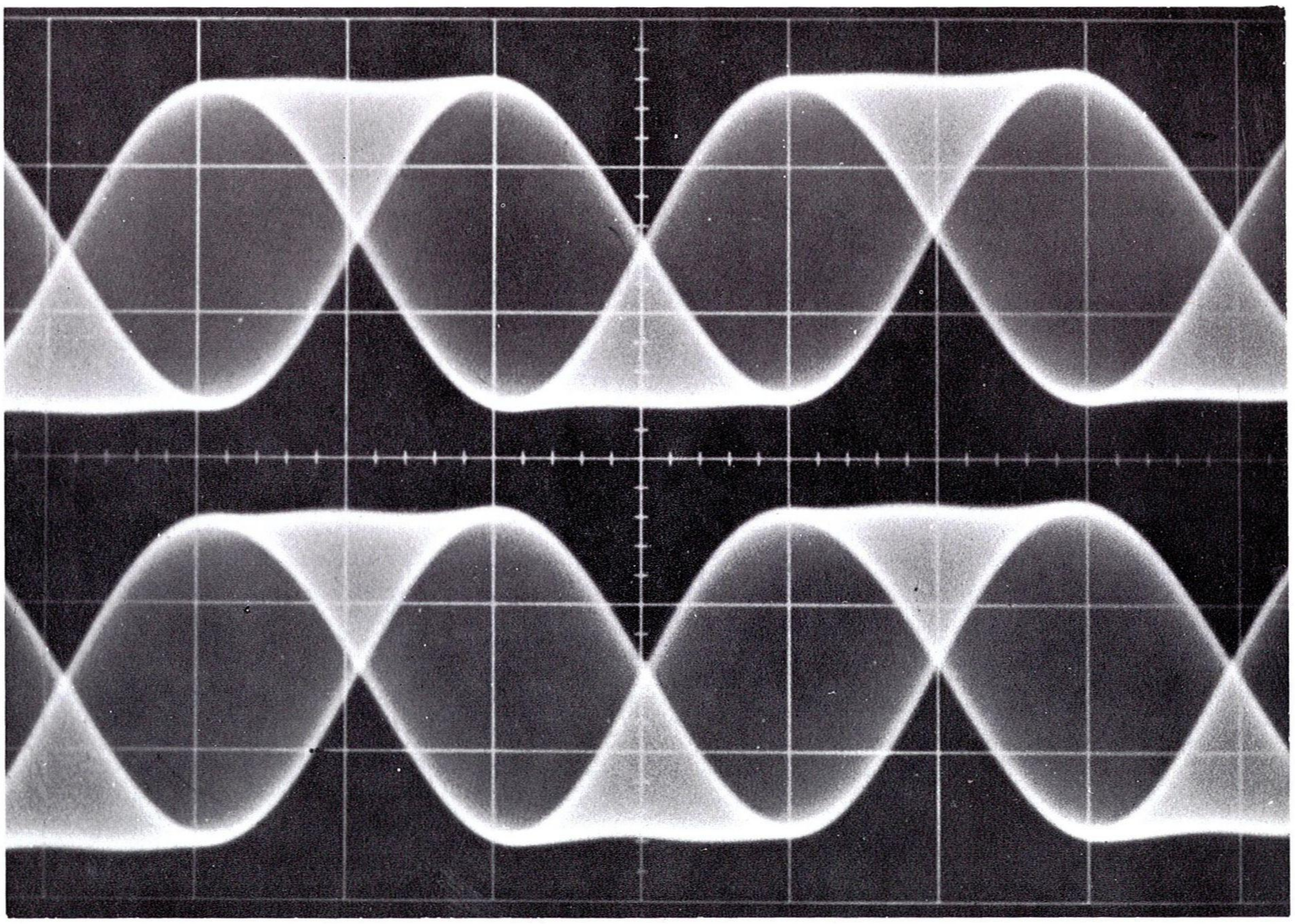

Picture 2 Example of modulated signal

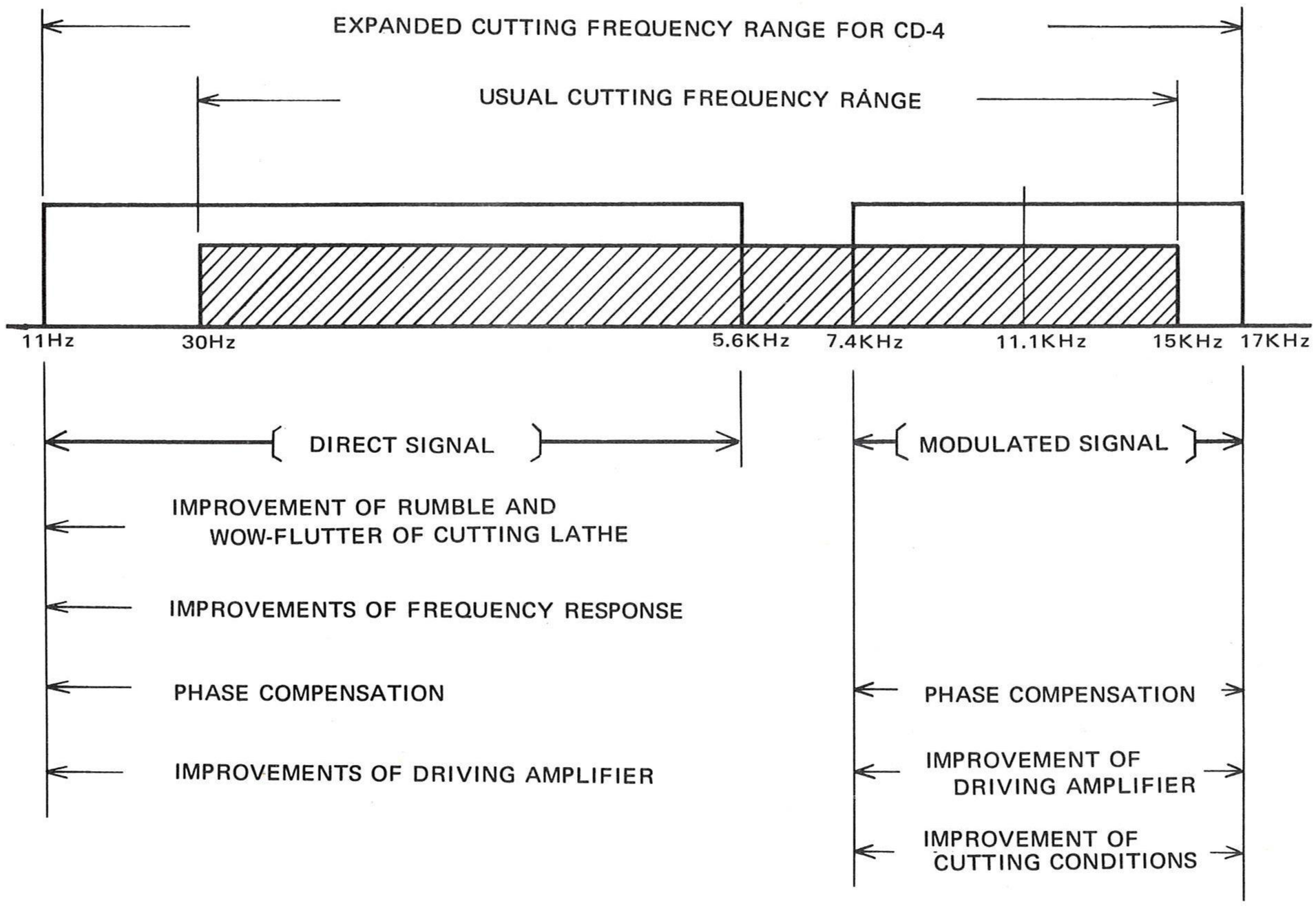

Fig. 5 ILLUSTRATION OF LOW SPEED CUTTING

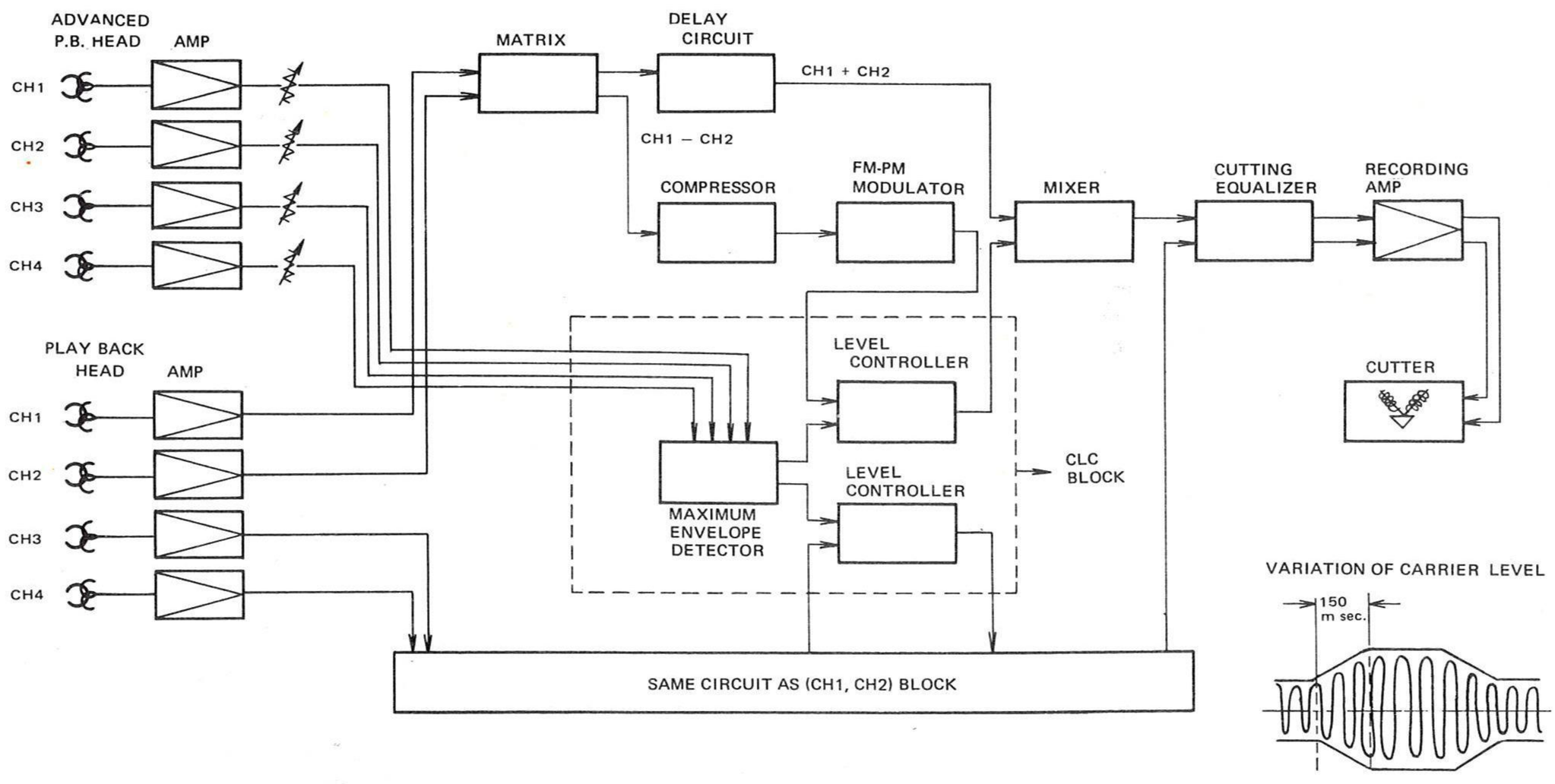

Fig. 6 BLOCK DIAGRAM OF CARRIER LEVEL CONTROLLER

4) Neutrex

When a PU cartridge traces the complicated sound groove cut with sum and modulated signals, it reproduces deformed sum signal and modulated signal as shown in Fig. 7-1. These signals contain much distortion and worse still defference signal are further modulated by sum signal.
In order to make the distortion smaller and the separation better, we have developed a new techniques named Neutrex, by improving Dyna Groove technique we have used for eight years.
As shown in Fig. 7-2, in this technique, we first compensate the cutting signal waveform and the modulation conditions of carrier together so that we can pick up correct signals when playing back.
This technique gives same excellent effect on the traditional 2-channel stereo recording as well.
Summarized effects of Neutrex follow.

1) Channel separation is improved because of the smaller mutual interference between sum and difference signals.
2) The distortion of sum signals is improved.
3) The fluctuation of the carrier level in the play back process lessens.

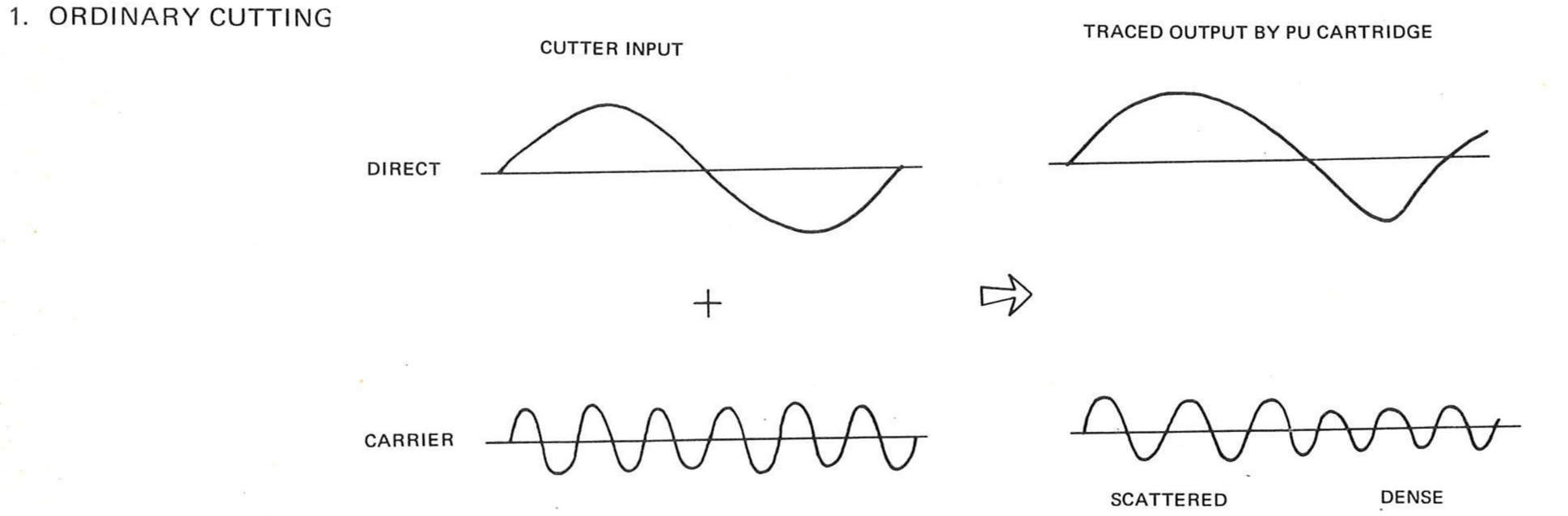

Fig. 7 NEUTREX PROCESS

Automatic Noise Reduction System

The difference signal is recorded in the frequency range between 20KHz and 45KHz so its recorded wave length is shorter than that of the conventional record. Special consideration is needed against noise. We have developed ANRS to reduce the noise in CD-4 system.
ANRS is used only for the difference signal path, then in case of reproducing conventional 2-channel record no difference signal passes through ANRS, and the original tone quality is perfectly reproduced (Fig. 8) (Fig. 9).
The operation of ANRS is shown in the diagram below.

	Low Difference Signal Level	High Difference Signal Level
Recording Process	Frequency above 700Hz emphasized	Frequency Response flat
Play-back Process	Frequency above 700Hz suppressed	Frequency Response flat

The ANRS operates automatically according to the difference signal level, but the operation is executed only when the signal level is low.
It is most important that the output signal is identical to the input signal. (that is, x=Z as shown in Fig. 9)
This means no lost of information and high fidelity play back.
The ANRS gives 15dB noise reduction at higher frequency range and distortion caused by crosstalk decreases to 1/3.

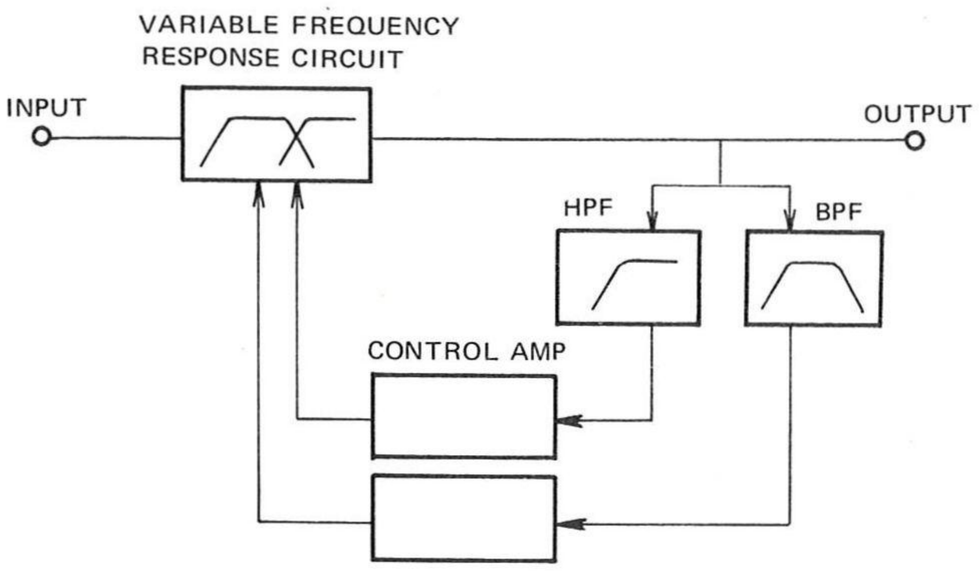

(COMPRESSOR BLOCK DIAGRAM)

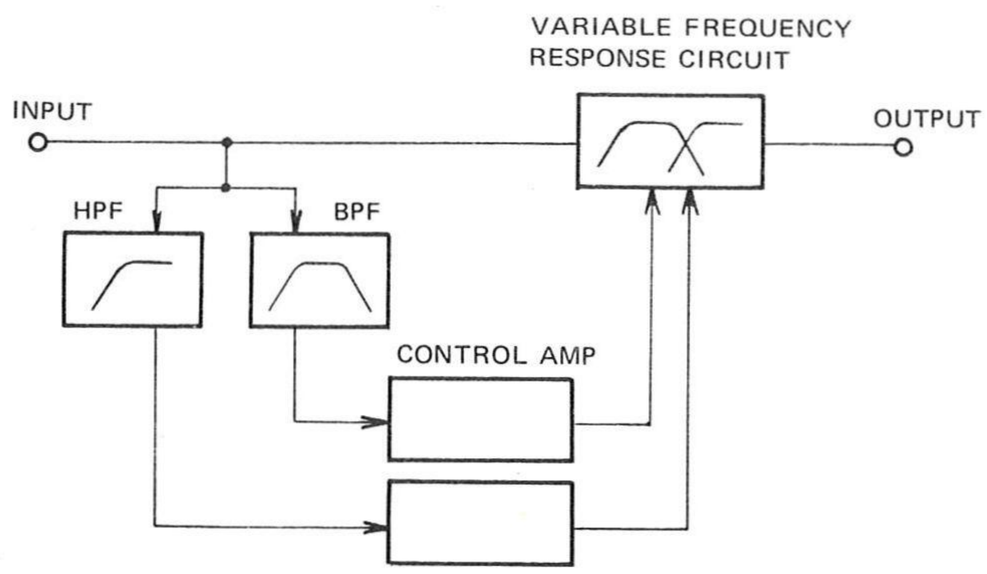

(EXPANDER BLOCK DIAGRAM)

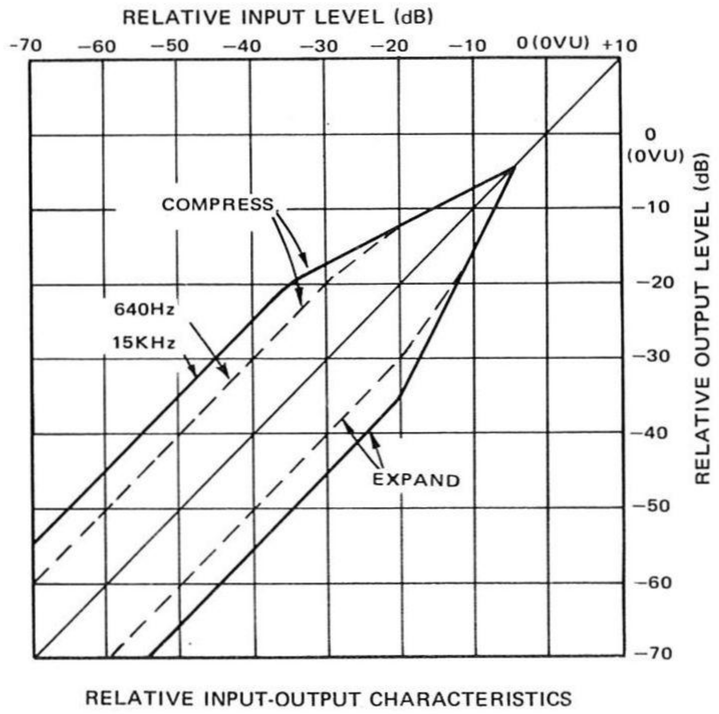

RELATIVE INPUT-OUTPUT CHARACTERISTICS

Fig. 8

PROCESS OF AUTOMATIC NOISE REDUCTION SYSTEM

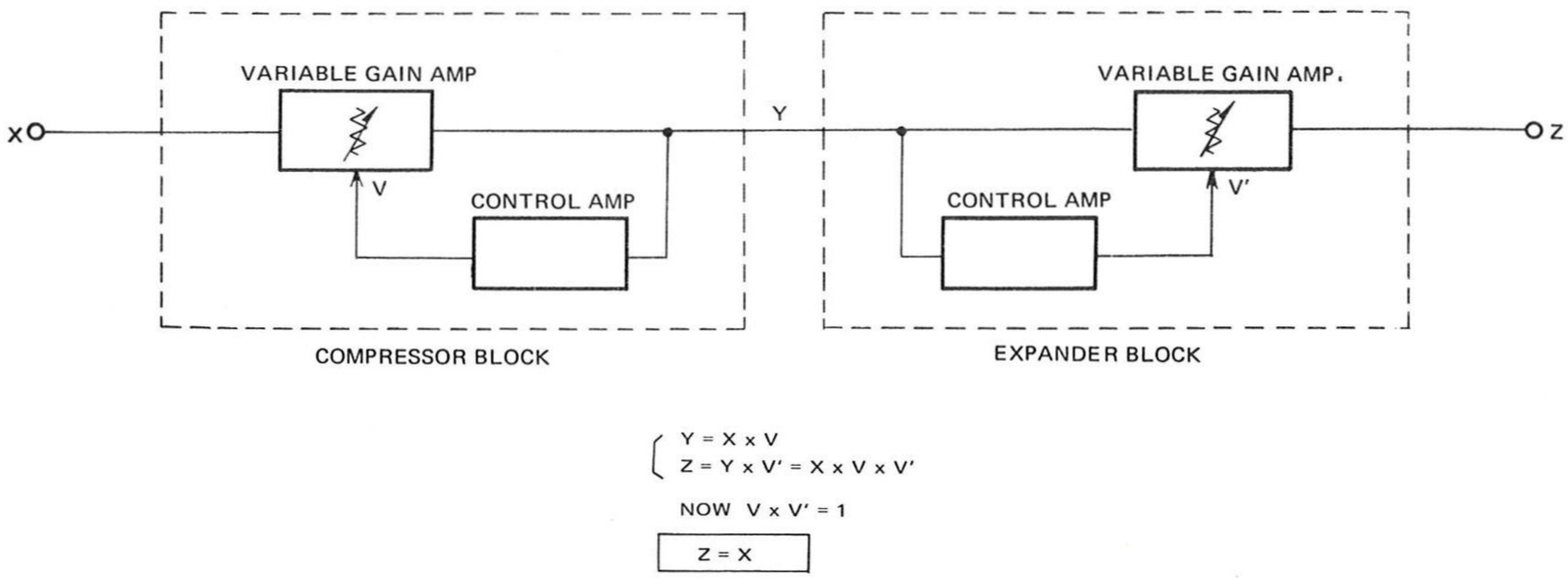

$$\begin{cases} Y = X \times V \\ Z = Y \times V' = X \times V \times V' \end{cases}$$

NOW $V \times V' = 1$

$$Z = X$$

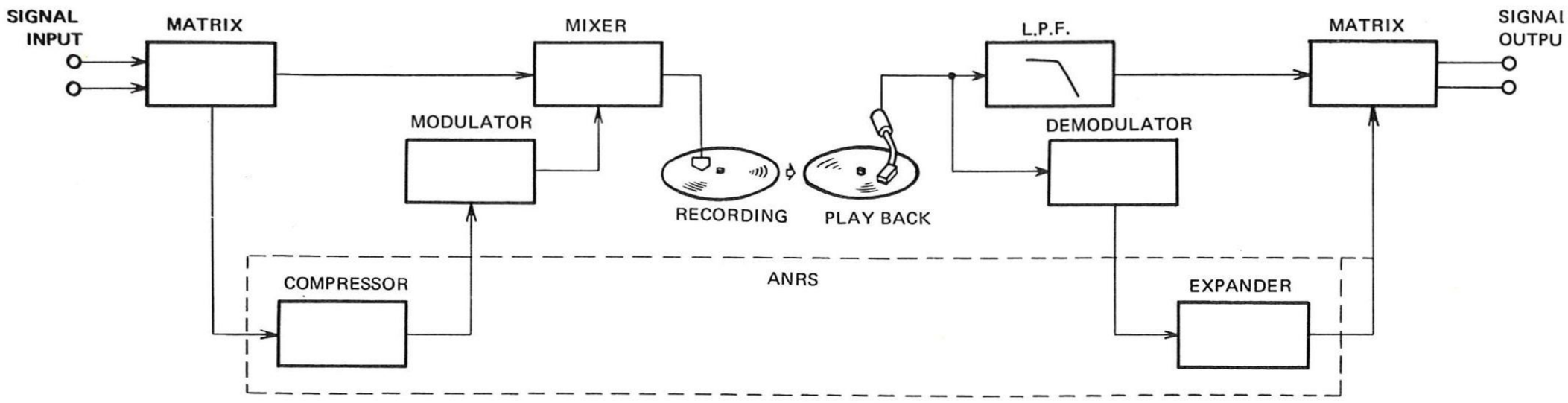

Fig. 9

BLOCK DIAGRAM OF AUTOMATIC NOISE REDUCTION SYSTEM

6) Shibata Stylus

It is ideal that the play back stylus and the cutting stylus are identical, but actually it is difficult to realize. Usually an elliptical stylus tip is used to approximate cutting stylus as a high class product.

In CD-4 system we have developed a new stylus named Shibata Stylus, which has 4 times as large contact surface with the groove, whose radius is 7 μ against the direction of the record rotation, and which can pick up the carrier signal correctly and play back with still higher fidelity.

The Comparison between Shibata Stylus and the usual elliptical stylus in shape and frequency characteristics is shown in Fig. 10.

The merits of Shibata Stylus are

1) Frequency characteristic extends to higher range (50 Per cent)
2) Durability of a reocrd becomes larger (weight per unit area becomes 1/4)
3) Wear of a stylus tip is small
4) Improvement of S/N (Because a small deformation of grrove)
5) Radius of a stylus tip is almost ideal, and therefore, distortion and phase distortion are much smaller, giving high fidelity play back.
6) Good production (for cutting easier than an elliptical stylus tip)

With Shibata Stylus you can also play back a conventional record with higher fidelity.

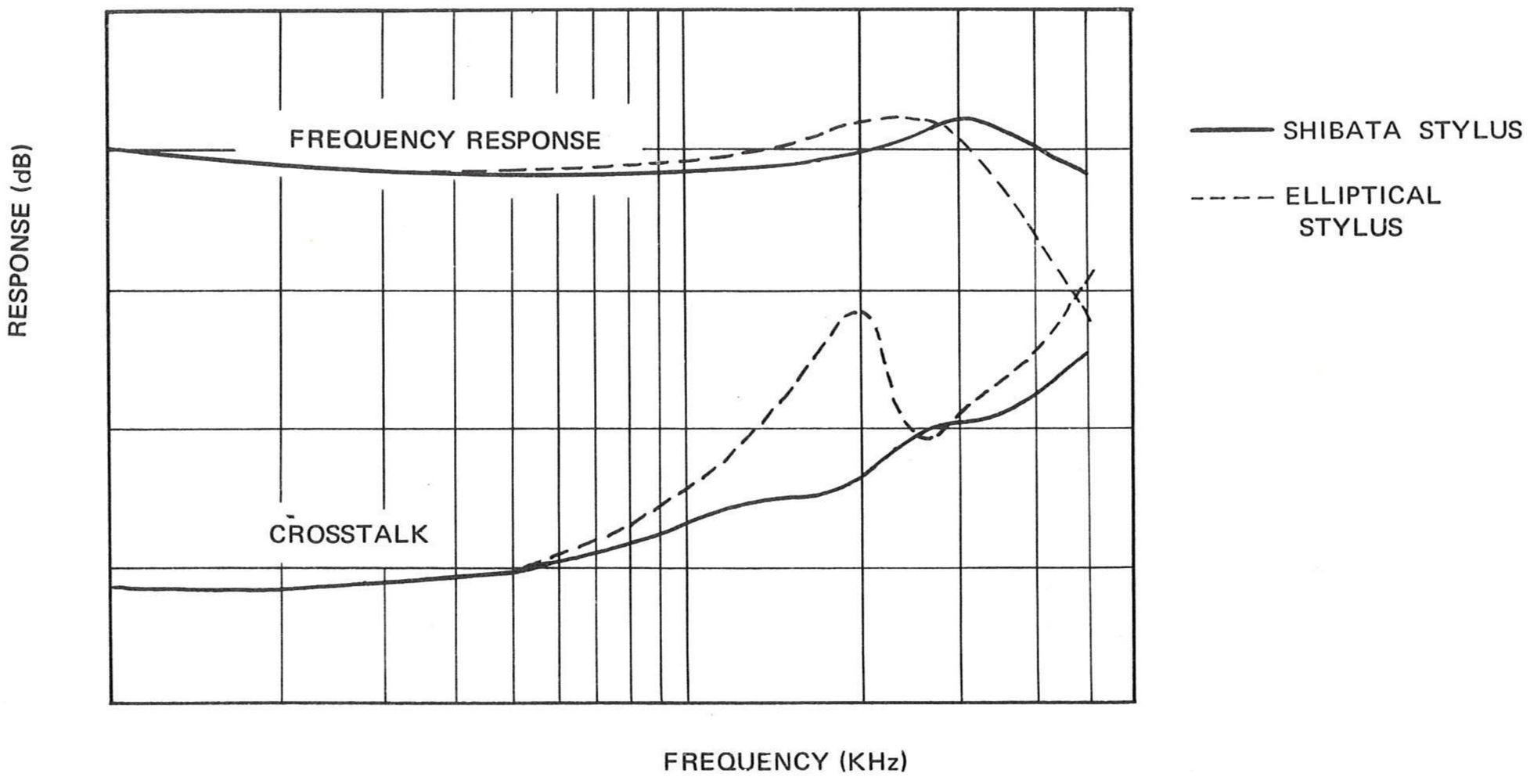

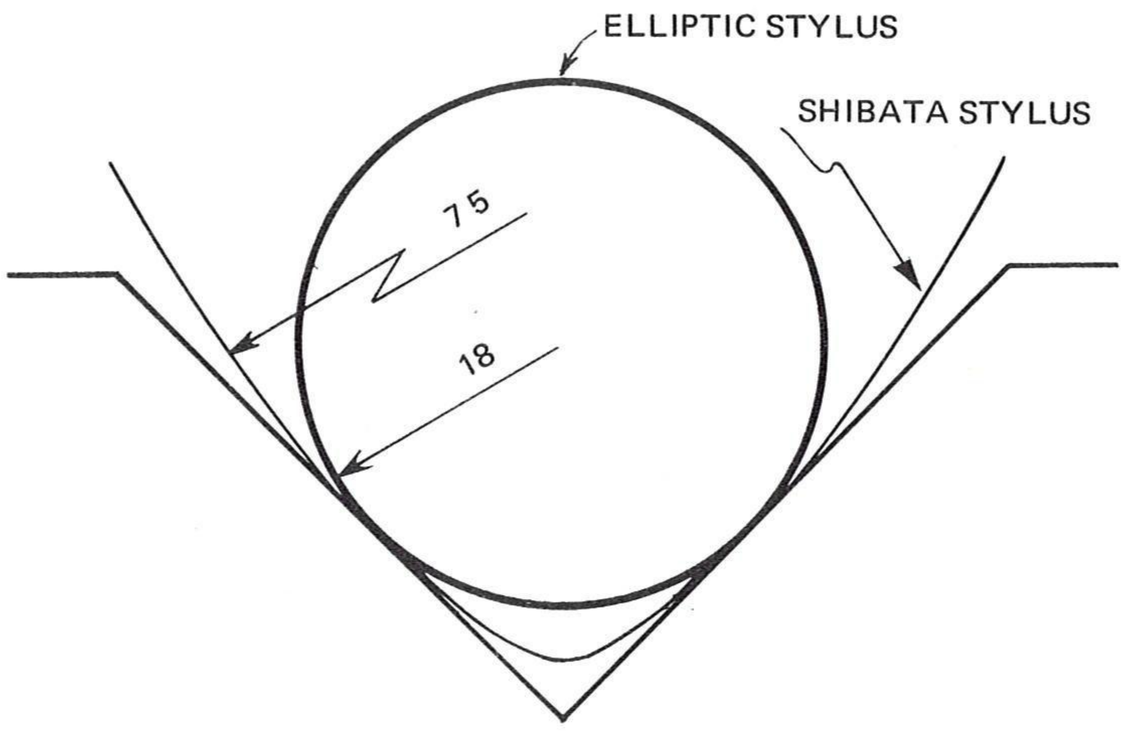

Fig. 10 THE SHAPE AND THE CHARACTERISTICS OF THE SHIBATA STYLUS

3. Operation of CD-4 Record

Front Panel

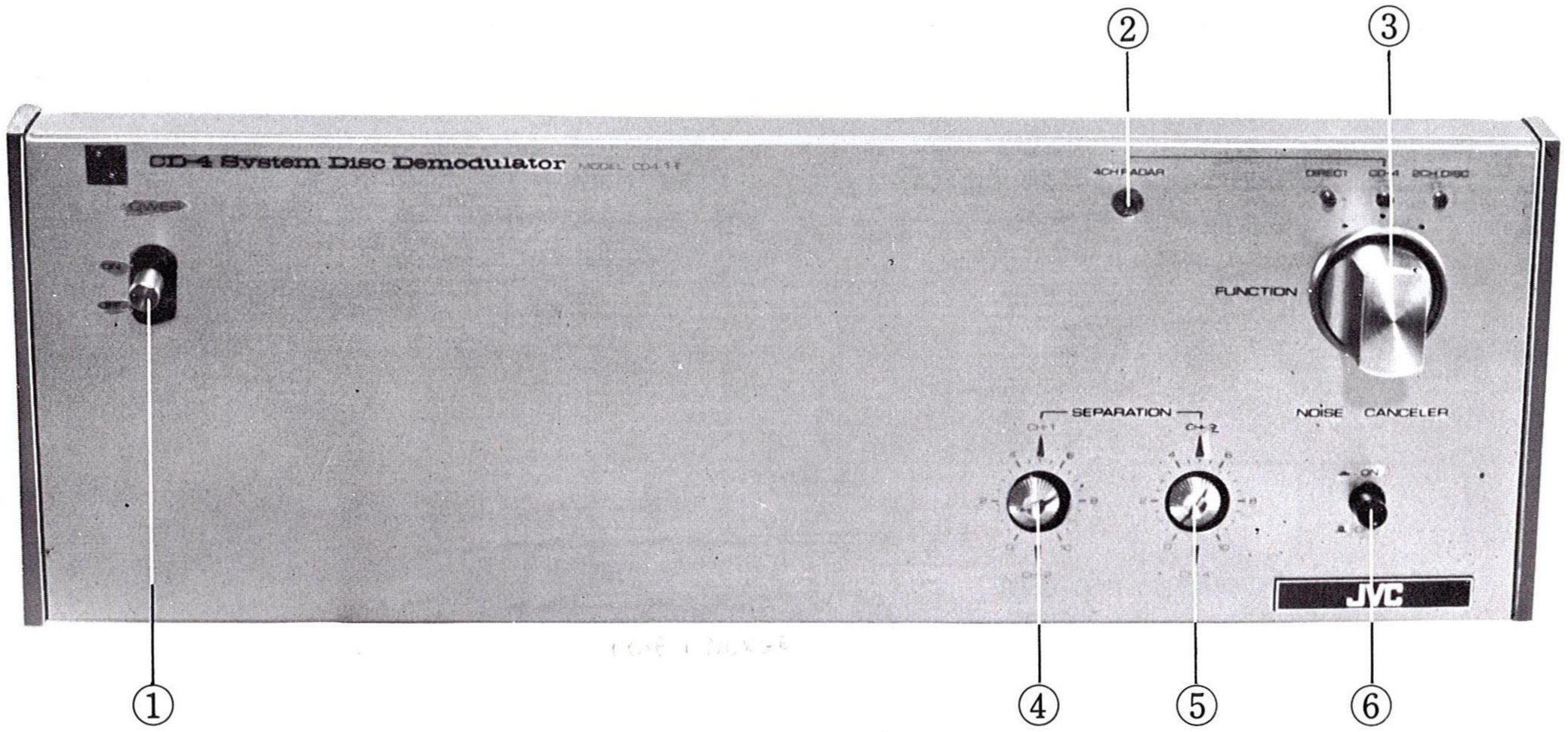

1 Power Switch:

2 4-Channel radar:

The radar lamp lights up when a 4-channel record is played (only with the FUNCTION selector set to CD-4).

3 Function selector:

DIRECT: Set it to this position when you play a conventional stereo record using a 2-channel stereo cartridge. The 2-channel stereo record is played through the equalizer of an amplifier in this case.

CD-4: Set it to this position when you play a CD-4 record using a CD-4 cartridge.

2CH DISC: Set it to this position when you play a conventional stereo record using a CD-4 cartridge.

4 & 5 Separation adjustment:

4: For controlling separation between left front and rear channels (CH-1 and CH-2).

5: For controlling separation between right front and rear channels (CH-3 and CH-4).

6 Noise canceller:

When high frequency noise is heard during CD-4 record reproduction, push this knob to turn the noise canceller on. It will cut the high frequency noise. To turn it off, push the knob again.

Rear Panel

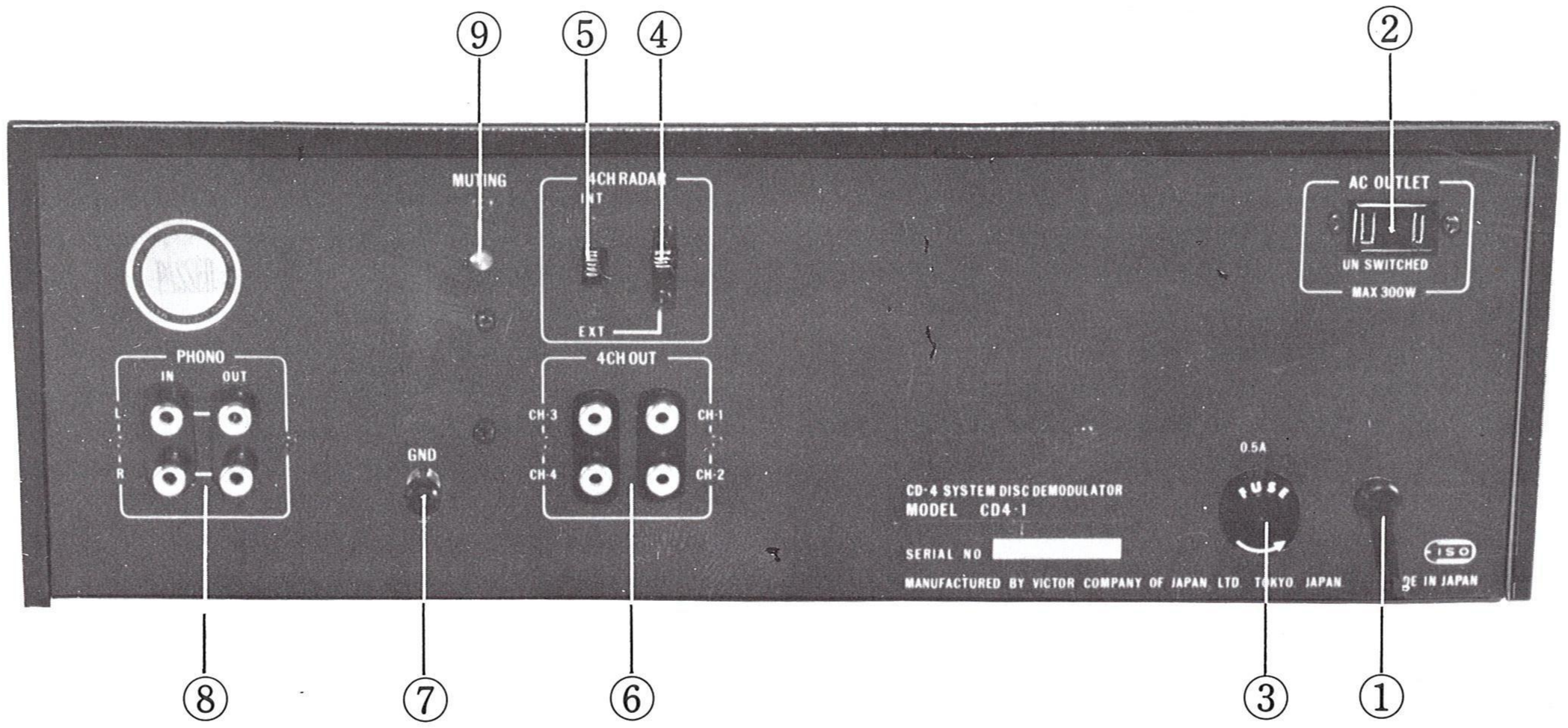

1 AC Plug

2 AC Outlet

3 Fuse Holder

4 4-Channel radar jack:

Provides 4-channel radar signals when the channel radar lamp on the stereo set is to light up.

5 4-Channel radar INT/EXT selector:

Push this switch up to INT, and the demodulator's 4-channel radar lamp will light up when a CD-4 record is played. With this switch pushed down to EXT the 4-channel radar lamp on the stereo set lights up and the demodulator's does not.

6 4-Channel output jacks:

These are channel outputs CH-1, CH-2, CH-3 and CH-4. Connect them to the AUX or 4CH IN jacks of a pre-amplifier or 4CH pre-main-amplifier. For details see connection diagrams. Use the supplied signal cords (twin parallel cords) for this purpose. For convenience the CH-1, CH-2, CH-3 and CH-4 cords are colored in brown, red, orange and yellow respectively.

7 Earth terminal (GND):

Ground this terminal directly to the earth.

8 Player input/output jacks:

Connect the signal cords of the CD-4 record player to IN jacks; with the white cord to L and the red to R. Connect the OUT jacks to the amplifier's PHONO jacks; with the white cord to L and the red to R.

9 Muting knob:

The CD-4-1 is equipped with a circuit for making the 4-channel disk exclusive circuit ineffective when any record other than CD-4 is played. This knob is provided for adjusting its muting point. It has been adjusted to an optimum condition at factory. If necessary, adjust this knob in such a way that the radar lamp lights up when applying signals of 30KHz to the PHONO IN (L) and (R) jacks at a level of –80dBm.

A) Record Player

Since the sub-signals cut on the record are very fine, a high performance record player is necessary to play it.

1 A player is needed whose stylus tracking force can be adjusted to 1.5gr and which is provided with a tone arm that can trace the record stably.

2 In case of an automatic player, the lateral force at the time of automatic movement (especially in the case of a mechanical type) should be below 0.8gr.

3 The player should be equipped with some kind of cover to protect the record from dust while it is being played.
Providing the record-player is equipped with a universal type tone arm it can these conditions quite satisfactorily and does'nt present such a problem. However, since records are susceptible to dust special attention should be given to item C.

4 Signal output cords with high electrostatic capacity cannot be used since they attenuate the sub-signal output. Consequently only the designated cord or its equvalent should be used.

5 The electrostatic capacity of the signal cords inside the arm should also be low.
These conditions are absolutely essential for transmitting the cartridge output to the playback unit without loss.
Some players marketed by JVC are already equipped with a thick, red and white, shielded wire output cords designed for CD-4 record playback. Older model players having universal type arms, can still be used by simply changing the signal output cords and installing a cartridge for CD-4 reproduction.
In certain cases players having fixed type arms can be used, however if their arm rest and automatic mechanism design renders them impractical for such use then a player designed specially for CD-4 reproduction is recommended.

B) CD-4 Demodulator

When reproducing a 4-channel record this unit can be regulated to produce the finest possible 4-channel stereo effect.

1 Set the changeover switch to 4CH. (See Fig. 11)

2 Check the CD-4 system by playing the test record (Record No. 4D-101, 102), which is recorded on channels 1 and 3 only especially for this purpose and make any necessary adjustments. Using the main amplifier's volume control (or level control for each individual channel), reduce the volume of CH1, CH3 and CH4 until the sound can only be heard from CH2.

4 Due to leakage channel 1 may be heard from the channel 2 speaker. Minimize this by adjusting the demodulator's left hand separation volume control for CH1-CH2.

5 Next, reduce the volume for CH1, CH2 and CH3 by using the main amplifier's volume control and adjust the demodulator's CH3-CH4 separation volume control the same way as in (C) and (D).

6 If it is necessary to turn the separation volume control to the extreme left, then the polarity of the magnet inside the cartridge is in reverse. In such a case, reverse the connections of CH1 and CH2, and also those of CH3 and CH4 at the juncture of the demodulator and the main amplifier and try to adjust again.

7. Finally, adjust the volume of each channel until they are all at the same level and the sound is heard in the center of the speakers. Once the separation volume controls have been correctly set no further adjustment is necessary unless the cartridge is changed, since the recording characteristics of each record are the same.

C) How to Play a 2-channel Stereo Record

With a 2-channel stereo cartridge:

1. Set the selector switch of a front amplifier to PHONO.
2. Set the FUNCTION switch of the CD4-1 to DIRECT.
3. Turn the player's and the front amplifier's power switches on. (The CD4-1 and the rear amplifier are off.)
4. Make the same controls on the front amplifier as for playing a conventional 2-channel stereo record.

With a CD-4 cartridge:

1. Make the same preparations on the amplifiers as for playing a CD-4 record.
2. Set the FUNCTION switch of the CD4-1 to 2CH DISC.
3. Play a 2-channel stereo record.
4. The same sounds are heard from the front and rear speakers; that is, the front and rear left speakers (CH-1 and CH-2) deliver the same sound and the front and rear right (CH-3 and CH-4) the same. Adjust the channel volumes on the front and rear amplifiers as you please.

Caution: Be sure never to play a CD-4 record using a 2-channel stereo cartridge, otherwise it will damage the record.

Note

1. Separation controls
The separation controls are adjusted to suit the CD-4 cartridge being used (including stylus). Once they are set no further adjustment is necessary until the cartridge is replaced.

2. Cartridge replacement
To replace your 2-channel stereo cartridge with one for CD-4 use, mount it perpendicular to the plane of the record.

3. Interference from a television set
Interference may be experienced when a CD-4 record is played while a nearby television set is on. Switch off the TV set or place the CD-4 player about 50cm to 1m away from it.

4. CD-4 records are especially sensitive to dust, which adversely affects the quality of their reproduction. Be sure to clean them with the supplied cleaner before and after use. Don't use any spray-type cleaners that contain solvents or wash them with water.
You may use CD-4 cartridge to play stereo record. Be sure never to play CD-4 record using a 2-channel stereo cartridge.

5. Earthing
   (1) If your wall outlet is provided with an earth terminal, secure a length of insulated wire firmly to it. Take care not to insert the wire into the power outlet by mistake.
   (2) If it doesn't have one, strip the end of a piece of 10- to 20-core insulated wire up to about 50 to 70cm, wind it around a water pipe and then secure it by means of PVC tape.
   (3) This has no effect if the water pipe is made of PVC. In such a case, bury the exposed end of the insulated wire to a depth of about 50cm into the ground.

4 Attentions for CD-4 Playing

Although CD-4 records don't required any special attention to ensure prolonged life and optimum playing results the following points should be observed.

(A) As mentioned earlier, CD-4 records are susceptible to dust and should always be kept clean. Use the recommended cleaning wads and never apply liquid or spray cleaners.

(B) Handle the records carefully and don't put any fingerprints on the grooves as dust will adhere to them.

(C) Use a stylus approved by JVC, since stylus of inferior quality may result in damage to the records.

(D) The stylus tracking force for playing 4-channel records is 1.5–2gr. Make sure tha tone arm is correctly adjusted before operating the player.

(E) Since the click sound generated by the lowering and raising of the stylus is somewhat higher when playing 4-channel reocrds than it is with conventional 2-channel ones, the volume should be attenuated at that time.

(F) Close the cover of the player during operation so that no dust can fall on the record.

(G) As mentioned earlier, there is no need to re-adjust the demodulator's separation volume controls unless you change the cartridge.
However, their position should be checked occasionally to make sure that they have not been accidentally moved.

(H) If the unit is located too close to a TV receiver interference may occur, caused by radiation from the TV set entering the unit's sub-signal circuit. To eliminate this possibility keep the unit at least 20" away from the TV set.

(I) There are various speaker arrangements for 4-channel stereo. The 2-2SD and 2-2FT systems shown in Fig. . Enjoy your favorite music in dynamic 4-channel format delivered through speakers arranged to your satisfation.

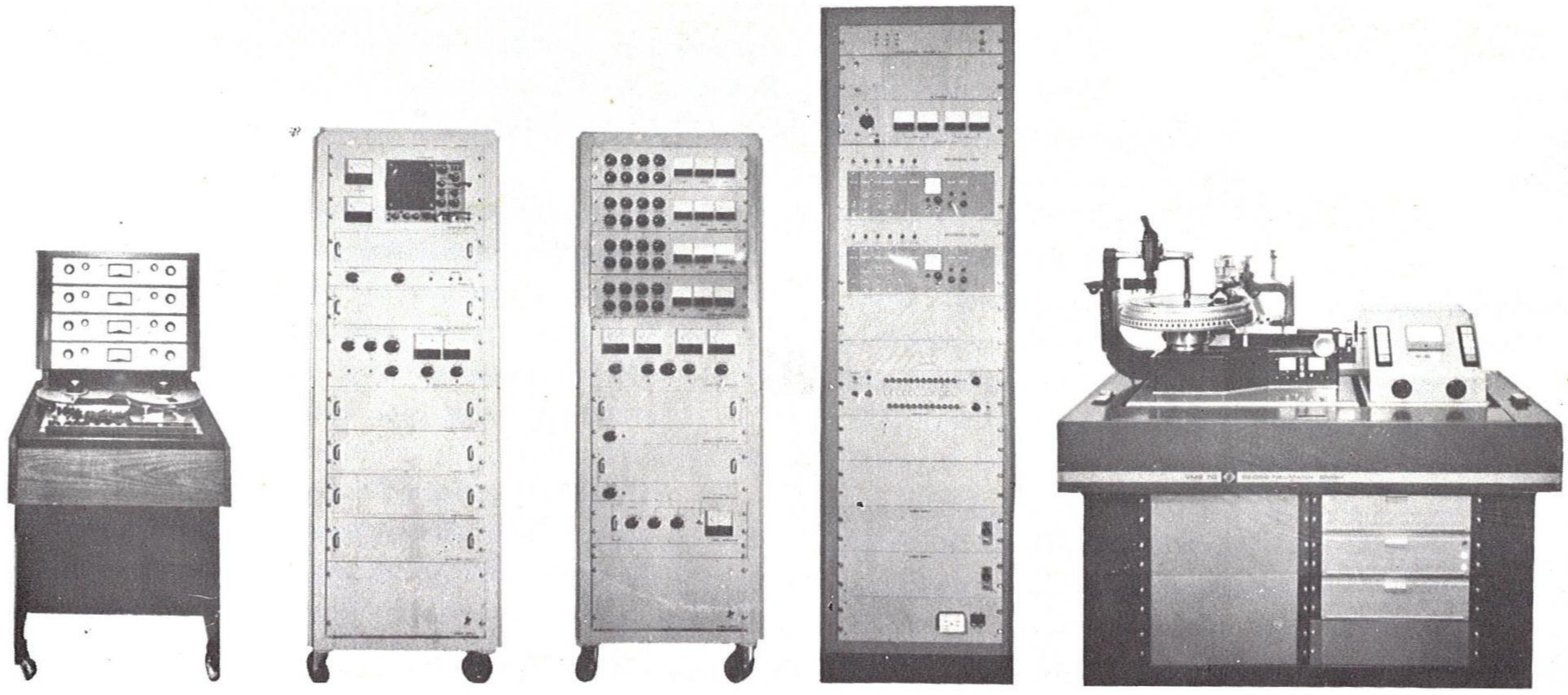

Photo. 1 CD-4 Cutting System

JVC
NIVICO

MANUFACTURED BY VICTOR COMPANY OF JAPAN, LTD.

PRINTED IN JAPAN